HOBART

Geschirrspülmaschinen
Warewashers
Machines à laver la vaisselle

CS / CN / CP

ERSATZTEILE
SPARE PARTS
PIECES DETACHEES

Ab Serien-Nummer:
Starting from Serial No.:
A partir du no. de série:

CN/CP	Protronic	- **8645 1001**
CN	Smartronic	- **8646 6001**
CS	Easytronic	- **8643 6001**

REV. 28.04.2009

Die in diesem Katalog aufgeführten Elektroteile beziehen Sich auf folgende Anschluss-Spannungen:

Electrical components listed in this catalogue are rated for the following supply voltages:

Les composants électriques énumérés dans ce catalogue sont prévus pour les tensions suivantes:

400V / 50Hz / 3 / PE

Bei nicht aufgeführten Anschluss-Spannungen bitte den, der Maschine beigelegten Schaltplan beachten.

For other voltages, refer to the wiring diagram shipped with the machine.

Pour d'autres tensions, se référer au schéma électrique envoyé avec la machine.

	ERKLÄRUNG	LEGEND	LEGENDE
1	Verschleißteile	Wearing parts	Pièces d'usure
1	Betriebswichtige Ersatzteile	Recommended spare parts	Pièces de rechange pour maintenance
(L / R)	Laufrichtung links / rechts	Operation direction left / right	Sens de marche gauche / droite
(R / L)	Laufrichtung rechts / links	Operation direction right / left	Sens de marche droite / gauche
BSP	Besteckspurbreite	Cutlery track width	Largeur de la piste des couverts

Inhalt — Kapitel

Hauben 01
E Vorwaschung 02
L Vorwaschung 03
S/A Vorwaschung 04
C Vorwaschung 05
AR/AN Waschung 06
ND Modul 07
Spülmodul 08
Trennmodul 09
Waschsystem 10
Erhitzer 11
Spülsystem 12
Füllsystem 13
Wärmerückgewinnung 14
Wärmepumpe 15
Transportsystem 16
Türen und Verkleidungen 17
Trocknung – gerade 18
Transportkurven 19
Dampfverrohrung 20
CAF Eckeinschub 21
Tischendschalter 22
Vorhänge 23

Content — Chapter

Hoods 01
E prewash 02
L prewash 03
S/A prewash 04
C prewash 05
AR/AN wash 06
ND Module 07
Rinse module 08
Disconnecting module 09
Wash system 10
Booster 11
Rinse system 12
Filling system 13
Heat recovery 14
Heat pump 15
Transport system 16
Doors and panels 17
Dryer – straight 18
Transport curves 19
Steam piping 20
CAF corner guiding 21
Table end switch 22
Curtains 23

Sommaire **Chapitre**

Capots 01
E prélavage 02
L prélavage 03
S/A prélavage 04
C prélavage 05
AR/AN lavage 06
ND Module 07
Module de rinçage 08
Module de passage 09
Système de lavage 10
Chaudière 11
Système de rinçage 12
Système de remplissage 13
Récupération de la chaleur 14
Pompe à chaleur 15
Système de convoyage 16
Portes et panneaux 17
Séchage – droit 18
Convoyage d'angle 19
Tuyauterie vapeur 20
CAF guidage sur angle 21
Interrupteur fin-de-course de table 22
Rideaux 23

CS / CN / CP

Hauben

Hoods

Capots

VERSION 27.04.2009

HOBART

Zu- und Auslaufhauben
Loading and unload section – hoods
Zone d'entrée et de déchargement – capots

CN / CS / CP

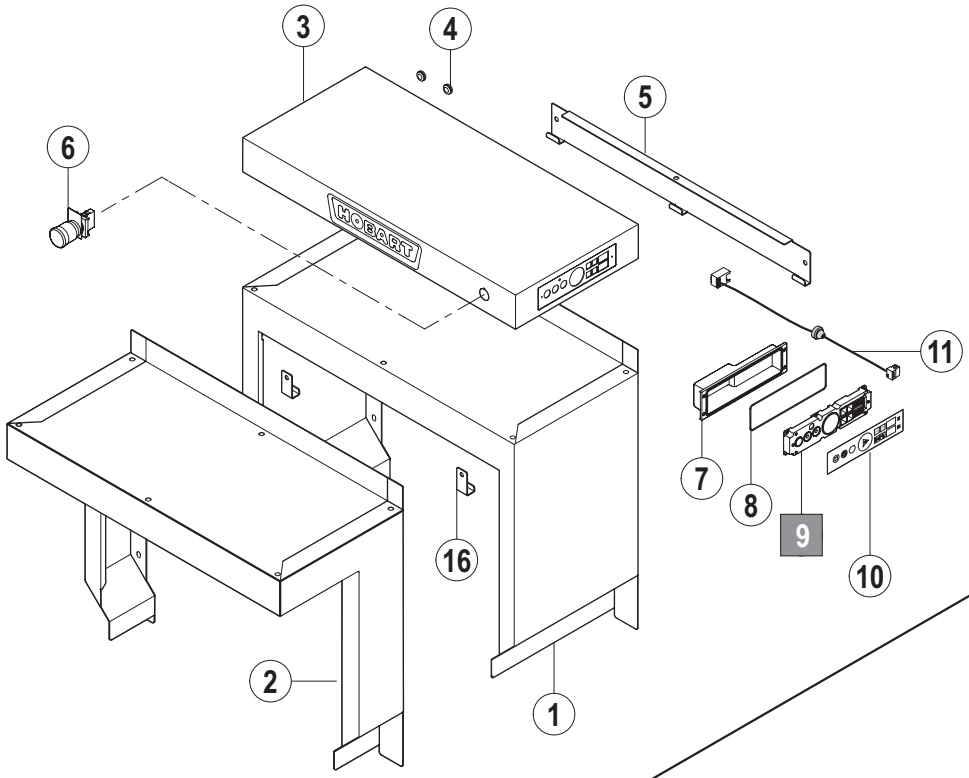

Zulauf
Loading section
Zone d'entrée

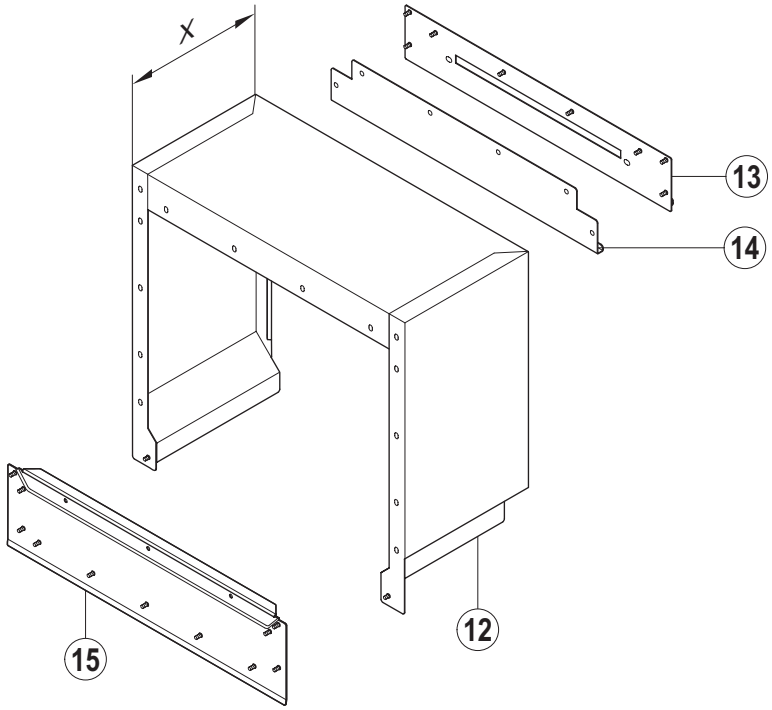

Auslauf
Unload section
Zone de déchargement

CN 01.1

HOBART

A Laufrichtung / Working direction / Sens de marche

B Maschinen-Grundtyp / Basic machine / Machine de base

X Länge / Length / Longueur

Pos.	A	B			X [mm]	Bemerkung / Remarks / Remarques
		CS	CN	CP		
01		---	01-291402-001	---		
02		---	01-291502-001	---		
03	L/R	---	01-291406-001	---		
	R/L	---	01-291406-002	---		
04		---	00-227748-001	---		
05		---	01-291538-002	---		
06		01-291707-001	=	=		
07		---	00-883984-001	---		
08		---	00-883805-001	---		
09		---	00-897540-002	---		
10		---	01-291845-001	---		
11		---	01-249757-001	---		
12		---	01-291404-001	=	300	
		01-291404-003	01-291404-002	01-291404-002	110	
13		01-291434-001	=	=		
14		01-291538-001	=	=		
15		01-291429-001	=	=		
16		---	01-291508-001	---		

CS / CN / CP

E Vorwaschung

E prewash

E prélavage

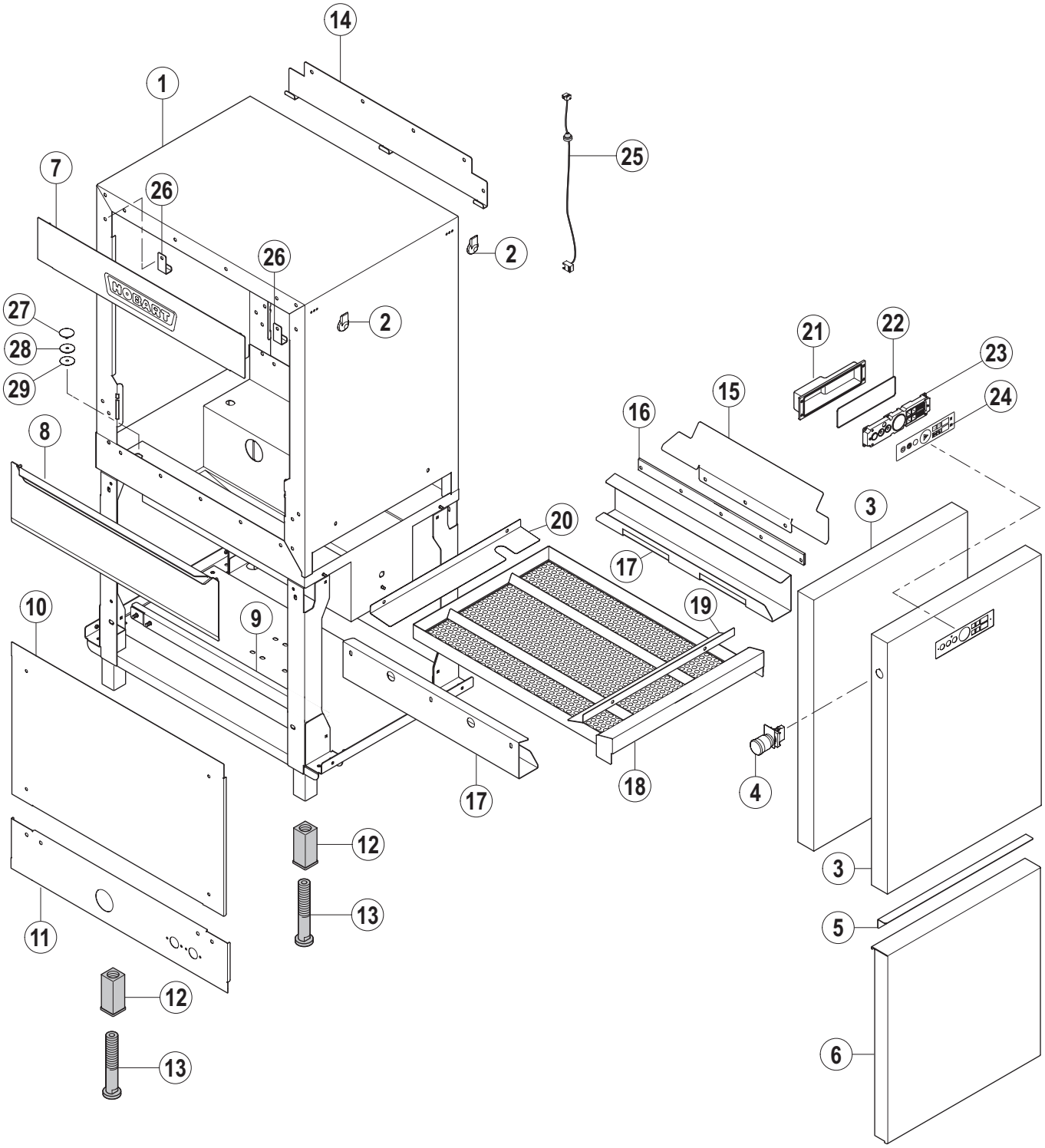
14
1
7
26
26
25
2
2
27
28
29
21
22
23
24
15
16
8
20
3
17
10
9
19
4
18
17
12
13
3
5
11
12
13
6

HOBART

A Laufrichtung / Working direction / Sens de marche

B Maschinen-Grundtyp / Basic machine / Machine de base

X Länge / Length / Longueur

Pos.	A	B			X [mm]	Bemerkung / Remarks / Remarques
		CS	CN	CP		
01	L/R	01-291558-003	01-291558-001	01-291558-001		
	R/L	01-291558-004	01-291558-002	01-291558-002		
02		00-325037-001	00-325037-001	00-325037-001		
03	L/R	01-291488-006	01-291488-001	01-291488-005		
	R/L	01-291488-006	01-291488-002	01-291488-005		
04		01-291707-001	=	=		
05		00-896335-001	=	=		
06		01-291785-001	=	=		
07		01-291497-001	=	=		
08		01-291429-001	=	=		
09		01-291432-001	=	=		
10		01-291409-002	=	=		
11	L/R	01-291408-001	=	=		
	R/L	01-291408-002	=	=		
12		00-325008-001	=	=		
13		00-325007-001	=	=		
14		01-291538-001	=	=		
15		00-896430-003	=	=		
16		00-325155-003	=	=		
17		01-291783-001	=	=		
18		01-291782-001	=	=		
19		01-291784-001	=	=		
20	L/R	01-291784-002	=	=		
	R/L	01-291784-003	=	=		
21		---	00-883984-001	---		
22		---	00-883805-001	---		
23		---	00-897540-002	---		
24		---	01-291845-001	---		
25		---	01-249757-001	---		
26		01-291508-001	=	=		
27		00-869137-003	=	=		
28		00-168611-024	=	=		
29		00-696943-030	=	=		

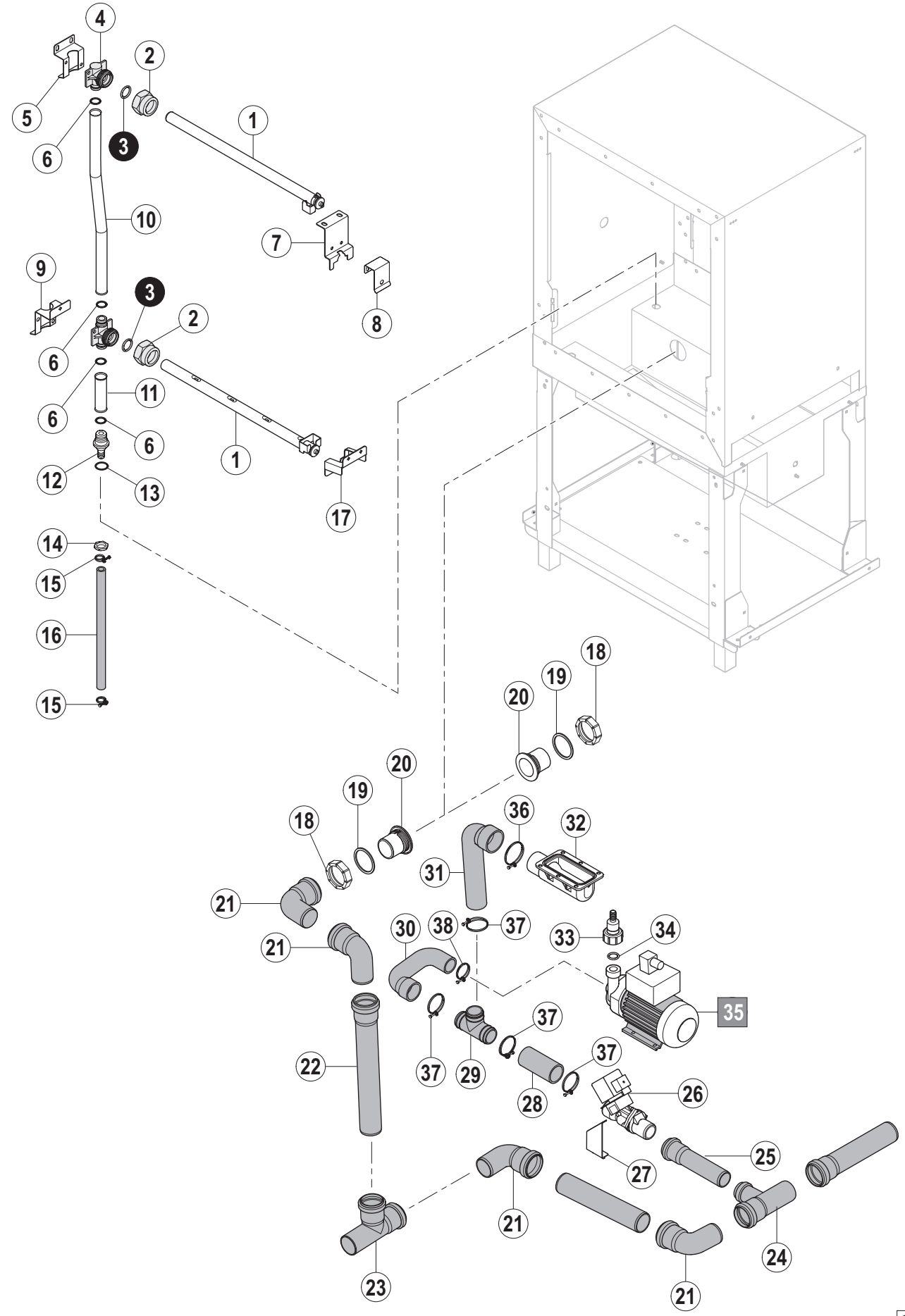
4
2
5
1
6
3
10
7
9
3
2
8
6
11
6
6
1
12
13
17
14
15
16
15
18
19
20
20
19
36
32
18
31
21
30
38
37
33
34
21
35
37
22
37
29
37
28
26
27
25
21
24
23
21
CN 02.2

Pos.	A	B			X [mm]	Bemerkung / Remarks / Remarques
		CS	CN	CP		
01		01-291307-001	=	=		
02		00-885572-001	=	=		
03		00-884505-002	=	=		
04		01-245318-002	=	=		
05		01-291337-001	=	=		
06		01-245340-001	=	=		
07		01-291495-001	=	=		
08		01-245062-001	=	=		
09		01-291341-001	=	=		
10		01-245323-003	=	=		
11		01-291297-003	=	=		
12		01-245329-001	=	=		
13		01-245340-002	=	=		
14		00-172739-009	=	=		
15		00-323945-022	=	=		
16		01-245571-014	=	=		
17		01-291494-001	=	=		
18		01-245165-001	=	=		
19		01-245460-001	=	=		
20		01-245112-001	=	=		
21		00-230080-001	=	=		
22		00-229679-015	=	=		
23		00-230079-001	=	=		
24		00-323593-002	=	=		
25		00-325706-011	=	=		
26		00-774683-...	=	=		siehe Schaltplan / see wiring diagram / voir schéma de câblage
27		01-291686-001	=	=		
28		01-291525-002	=	=		
29		01-291562-001	=	=		
30		01-291691-001	=	=		
31		01-242108-002	=	=		
32		00-325529-001	=	=		
33		00-895735-001	=	=		
34		00-067500-072	=	=		
35		00-781237-...	=	=		siehe Schaltplan / see wiring diagram / voir schéma de câblage
36		00-325945-064	=	=		
37		00-325945-053	=	=		
38		00-325945-043	=	=		

CS / CN / CP

L Vorwaschung

L prewash

L prélavage

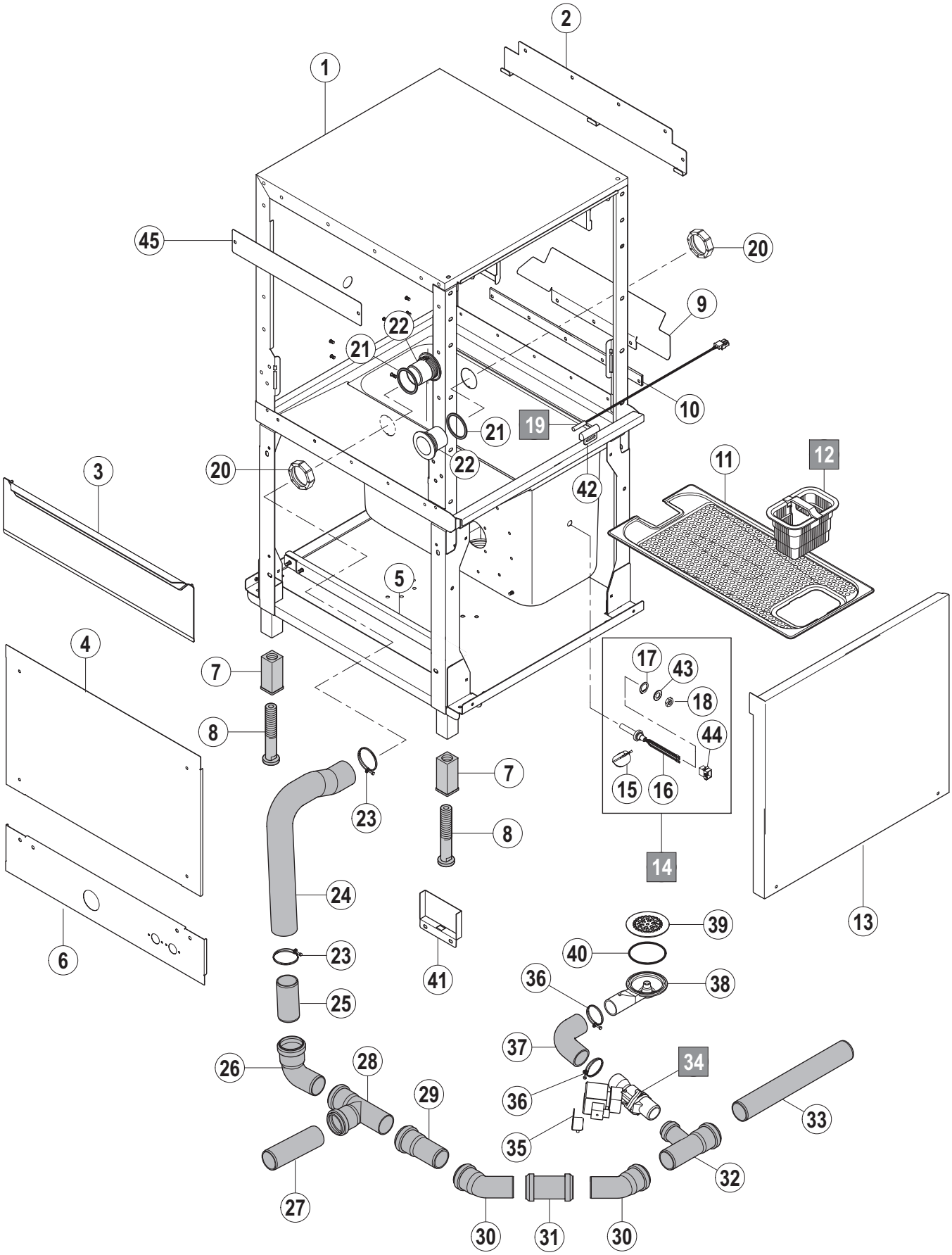
1
2
3
4
5
6
7
8
9
10
11
12
13
14
15
16
17
18
19
20
21
22
23
24
25
26
27
28
29
30
31
32
33
34
35
36
37
38
39
40
41
42
43
44
45

CN 03.1

Pos.	A	B			X [mm]	Bemerkung / Remarks / Remarques
		CS	CN	CP		
01	L/R	---	01-291705-002	=		
	R/L	---	01-291705-001	=		
02		---	01-291538-001	=		
03		---	01-291429-001	=		
04	L/R	---	01-291409-001	=		
	R/L	---	01-291409-002	=		
05		---	01-291432-001	=		
06	L/R	---	01-291408-001	=		
	R/L	---	01-291408-002	=		
07		---	00-325008-001	=		
08		---	00-325007-001	=		
09		---	00-896430-003	=		
10		---	00-325155-003	=		
11		---	01-291289-001	=		
12		---	01-291515-001	=		
13	L/R	---	01-291407-006	=		
	R/L	---	01-291407-007	=		
14		---	01-245621-002	=		
15		---	00-122674-000	=		
16		---	01-296000-001	=		
17		---	00-112467-000	=		
18		---	00-602476-000	=		
19		---	01-240288-001	=		
20		---	01-245165-001	=		
21		---	01-245460-001	=		
22		---	01-245112-001	=		
23		---	00-323945-064	=		
24		---	01-291519-001	=		
25		---	00-325737-007	=		
26		---	00-230080-001	=		
27		---	00-325737-004	=		
28		---	00-230079-001	=		
29		---	00-229679-013	=		
30		---	00-377340-001	=		
31		---	00-229680-001	=		
32		---	00-323593-002	=		
33		---	00-325737-001	=		
34		---	00-774683-...	=		siehe Schaltplan / see wiring diagram / voir schéma de câblage
35		---	01-291684-002	=		
36		---	00-323945-053	=		
37		---	01-291527-002	=		
38		---	01-245109-001	=		
39		---	01-245107-001	=		
40		---	01-245340-004	=		
41		---	01-291982-001	=		
42		---	00-883838-001	=		
43		---	00-168611-021	=		
44		---	00-174994-013	---		
45		---	01-291197-004	---		

CS / CN / CP

S/A Vorwaschung

S/A prewash

S/A prélavage

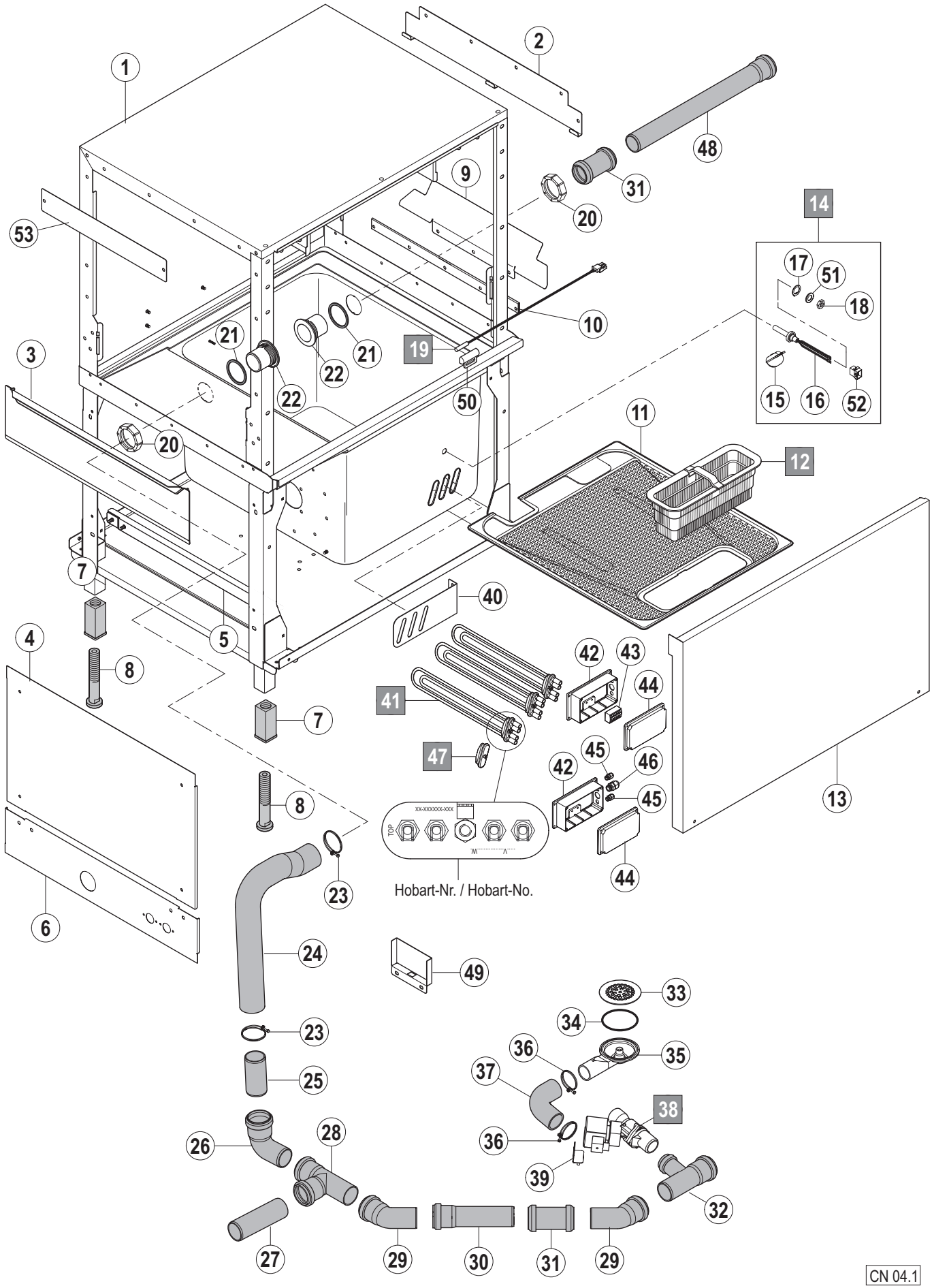
1
2
48
31
9
20
53
14
17
51
18
10
21
19
22
21
22
3
50
15
16
52
11
20
12
7
40
5
4
8
42
43
44
41
7
47
45
46
42
45
13
8
TOP
23
Hobart-Nr. / Hobart-No.
44
6
24
49
33
23
34
36
35
37
25
38
26
28
36
39
32
27
29
30
31
29

CN 04.1

Pos.	A	B			X [mm]	Bemerkung / Remarks / Remarques
		CS	CN	CP		
01	L/R	---	01-291706-001	=		
	R/L	---	01-291706-002	=		
02		---	01-291538-001	=		
03		---	01-291429-001	=		
04	L/R	---	01-291409-001	=		
	R/L	---	01-291409-002	=		
05		---	01-291432-001	=		
06	L/R	---	01-291408-001	=		
	R/L	---	01-291408-002	=		
07		---	00-325008-001	=		
08		---	00-325007-001	=		
09		---	00-896430-003	=		
10		---	00-325155-003	=		
11	L/R	---	01-245047-006	=		
	R/L	---	01-245047-005	=		
12		---	01-245170-010	=		
13	L/R	---	01-291407-004	=		nur / only / seulement **S-Modul**
	R/L	---	01-291407-005	=		nur / only / seulement **S-Modul**
		---	01-291407-011	=		nur / only / seulement **A-Modul**
14		---	01-245621-002	=		
15		---	00-122674-000	=		
16		---	01-296000-001	=		
17		---	00-112467-000	=		
18		---	00-602476-000	=		
19		---	01-240288-001	=		
20		---	01-245165-001	=		
21		---	01-245460-001	=		
22		---	01-245112-001	=		
23		---	00-323945-064	=		
24		---	01-291519-001	=		
25		---	00-325737-007	=		
26		---	00-230080-001	=		
27		---	00-325737-004	=		
28		---	00-230079-001	=		
29		---	00-377340-001	=		
30		---	00-229679-011	=		
31		---	00-229680-001	=		
32		---	00-323593-002	=		
33		---	01-245107-001	=		
34		---	01-245340-004	=		
35		---	01-245109-001	=		
36		---	00-325945-053	=		
37		---	01-291527-002	=		
38		---	00-774683-…	=		siehe Schaltplan / see wiring diagram / voir schéma de câblage
39		---	01-291684-002	=		
40		---	01-245372-002	=		
41		---	00-324637-…	=		siehe Schaltplan / see wiring diagram / voir schéma de câblage
42		---	01-245373-001	=		
43		---	00-325025-000	=		
44		---	01-245374-001	=		

Pos.	A	B			X [mm]	Bemerkung / Remarks / Remarques
		CS	CN	CP		
45		---	00-695661-001	=		
46		---	00-695661-003	=		
47		---	00-774808-001	=		
48		---	00-229679-025	=		
49		---	01-291982-001	=		
50		---	00-883838-001	=		
51		---	00-168611-021	=		
52		---	00-174994-013	---		
53		---	01-291197-004	---		

CS / CN / CP

C Vorwaschung

C prewash

C prélavage

05.1

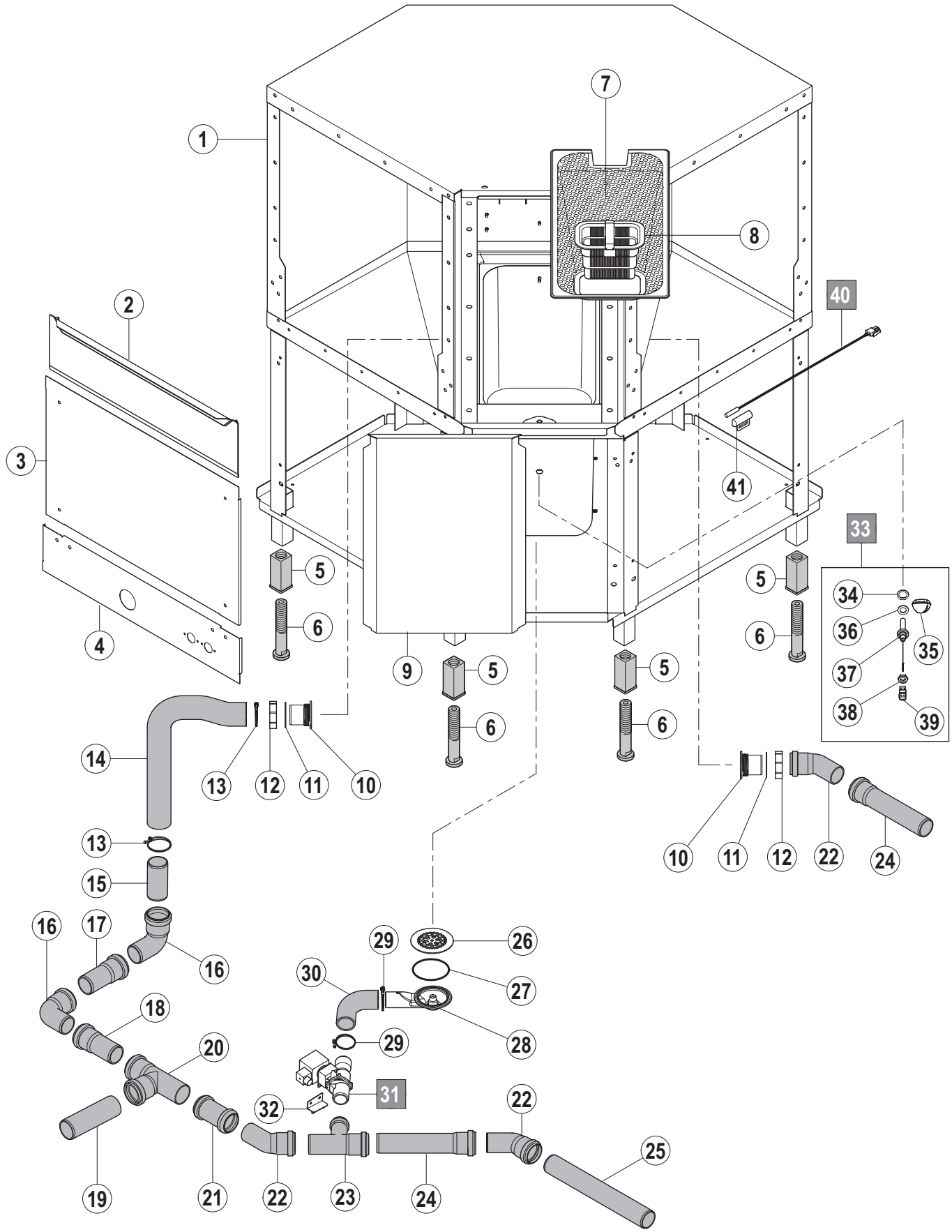
1
2
3
4
5
6
7
8
9
10
11
12
13
14
15
16
17
18
19
20
21
22
23
24
25
26
27
28
29
30
31
32
33
34
35
36
37
38
39
40
41

CN 05.1

Pos.	A	B			X [mm]	Bemerkung / Remarks / Remarques
		CS	CN	CP		
01	L/R	---	01-291999-001	=		
	R/L	---	01-291999-002	=		
02		---	01-291429-001	=		
03	L/R	---	01-291409-001	=		
	R/L	---	01-291409-002	=		
04	L/R	---	01-291408-001	=		
	R/L	---	01-291408-002	=		
05		---	00-325008-001	=		
06		---	00-325007-001	=		
07		---	01-291289-001	=		
08		---	01-291515-001	=		
09	L/R	---	01-296137-001	=		
	R/L	---	01-296137-002	=		
10		---	01-245112-001	=		
11		---	01-245460-001	=		
12		---	01-245265-001	=		
13		---	00-323945-064	=		
14		---	01-291519-001	=		
15		---	00-325737-001	=		
16		---	00-230080-001	=		
17		---	00-229679-013	=		
18		---	00-229679-012	=		
19		---	00-325737-004	=		
20		---	00-230079-001	=		
21		---	00-229680-001	=		
22		---	00-377340-001	=		
23		---	00-323593-002	=		
24		---	00-229679-024	=		
25		---	00-325737-001	=		
26		---	01-245107-001	=		
27		---	01-245340-004	=		
28		---	01-245109-001	=		
29		---	00-323945-053	=		
30		---	01-291527-002	=		
31		---	00-774683-…	=		siehe Schaltplan / see wiring diagram / voir schéma de câblage
32		---	01-291684-002	=		
33		---	01-245621-002	=		
34		---	00-112467-000	=		
35		---	00-112674-000	=		
36		---	00-168611-021	=		
37		---	01-296000-001	=		
38		---	00-602476-000	=		
39		---	00-174994-013	=		
40		---	01-240288-001	=		
41		---	00-883838-001	=		

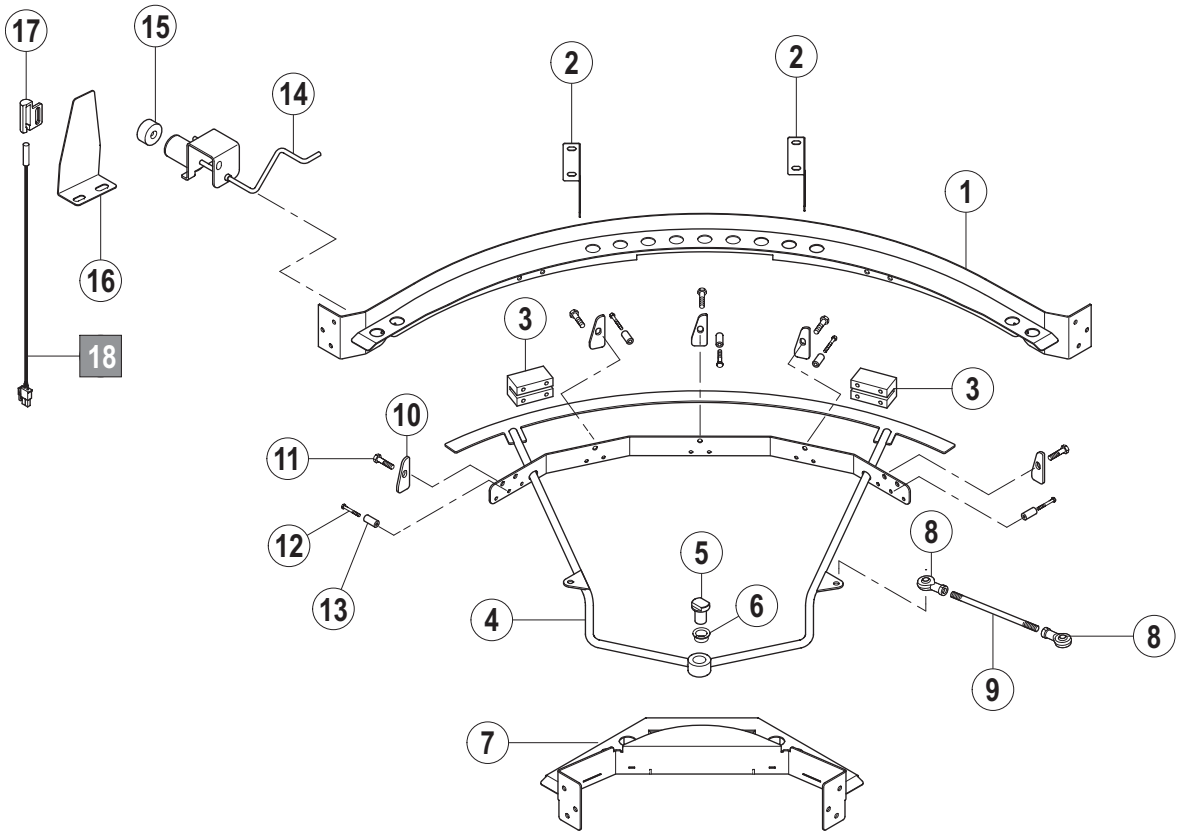

CN 05.2

Pos.	A	B			X [mm]	Bemerkung / Remarks / Remarques
		CS	CN	CP		
01		---	01-291139-001	=		
02		---	01-291055-001	=		
03		---	01-296049-001	=		
04		---	01-296059-001	=		
05		---	00-734988-001	=		
06		---	00-298963-012	=		
07		---	01-296138-001	=		
08		---	00-609067-000	=		
09		---	00-884128-003	=		
10		---	00-897777-002	=		
11		---	00-609313-000	=		
12		---	00-602643-000	=		
13		---	00-380528-037	=		
14	L/R	---	01-242189-001	=		
	R/L	---	01-242189-002	=		
15		---	00-774714-001	=		
16		---	01-291513-001	=		
17		---	01-240288-001	=		
18		---	00-883838-001	=		

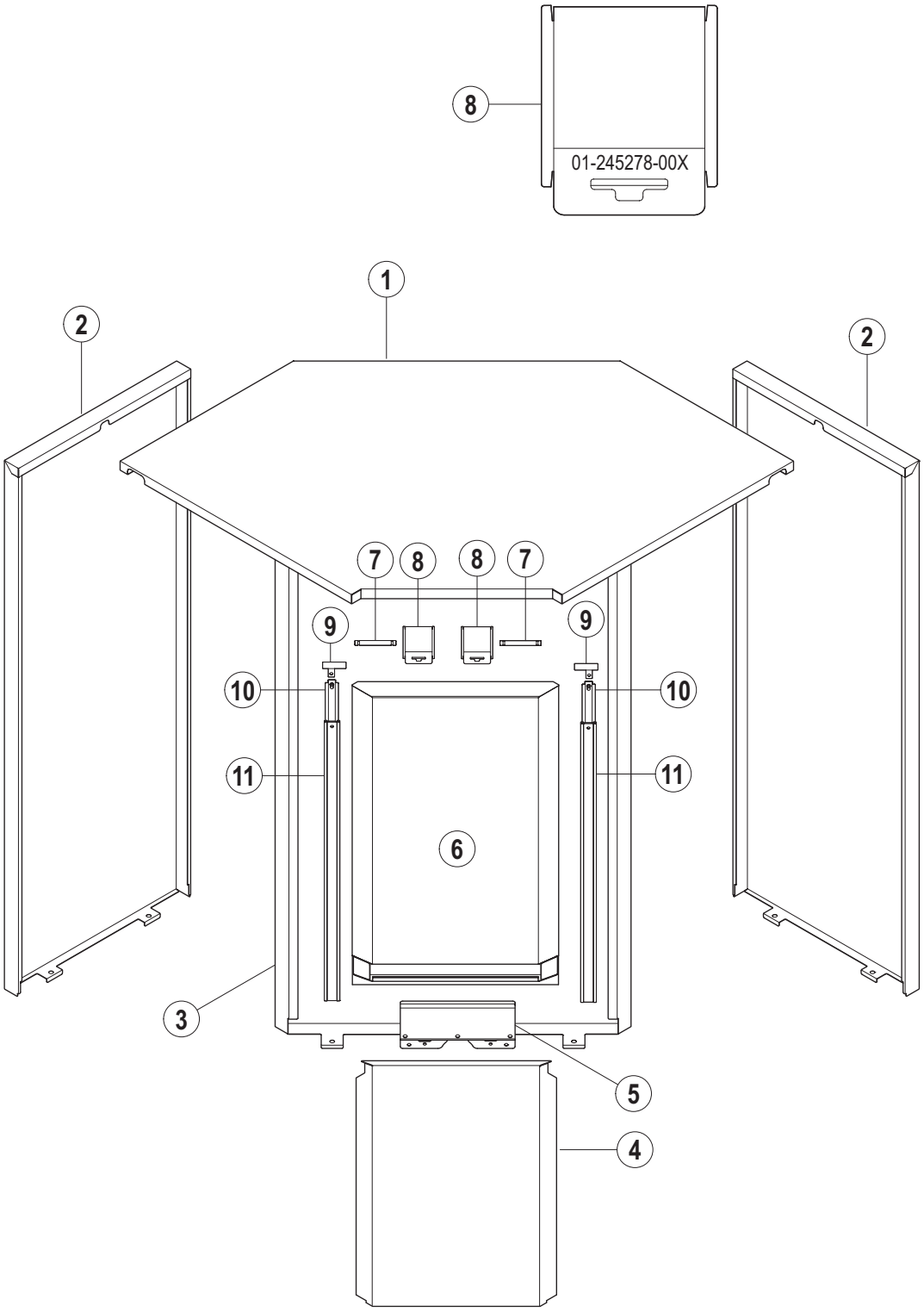

CN 05.3

A Laufrichtung / Working direction / Sens de marche

B Maschinen-Grundtyp / Basic machine / Machine de base

X Länge / Length / Longueur

Pos.	A	B			X [mm]	Bemerkung / Remarks / Remarques
		CS	CN	CP		
01		---	01-296154-001	=		ohne Isolierung / without insulation / sans isolation
		---	01-296154-002	=		mit Isolierung / with insulation / avec isolation
02		---	01-291317-004	=		ohne Isolierung / without insulation / sans isolation
		---	01-291711-004	=		mit Isolierung / with insulation / avec isolation
03		---	01-296116-001	=		ohne Isolierung / without insulation / sans isolation
		---	01-291711-006	=		mit Isolierung / with insulation / avec isolation
04		---	01-296-137-001	=		
05		---	01-245279-003	=		
06		---	01-296112-001	=		
07		---	01-245281-001	=		
08		---	01-245278-008	=		
09		---	01-291426-001	=		
10		---	01-245126-003	=		
11		---	00-325064-008	=		

CS / CN / CP

AR/AN Waschung

AR/AN wash

AR/AN lavage

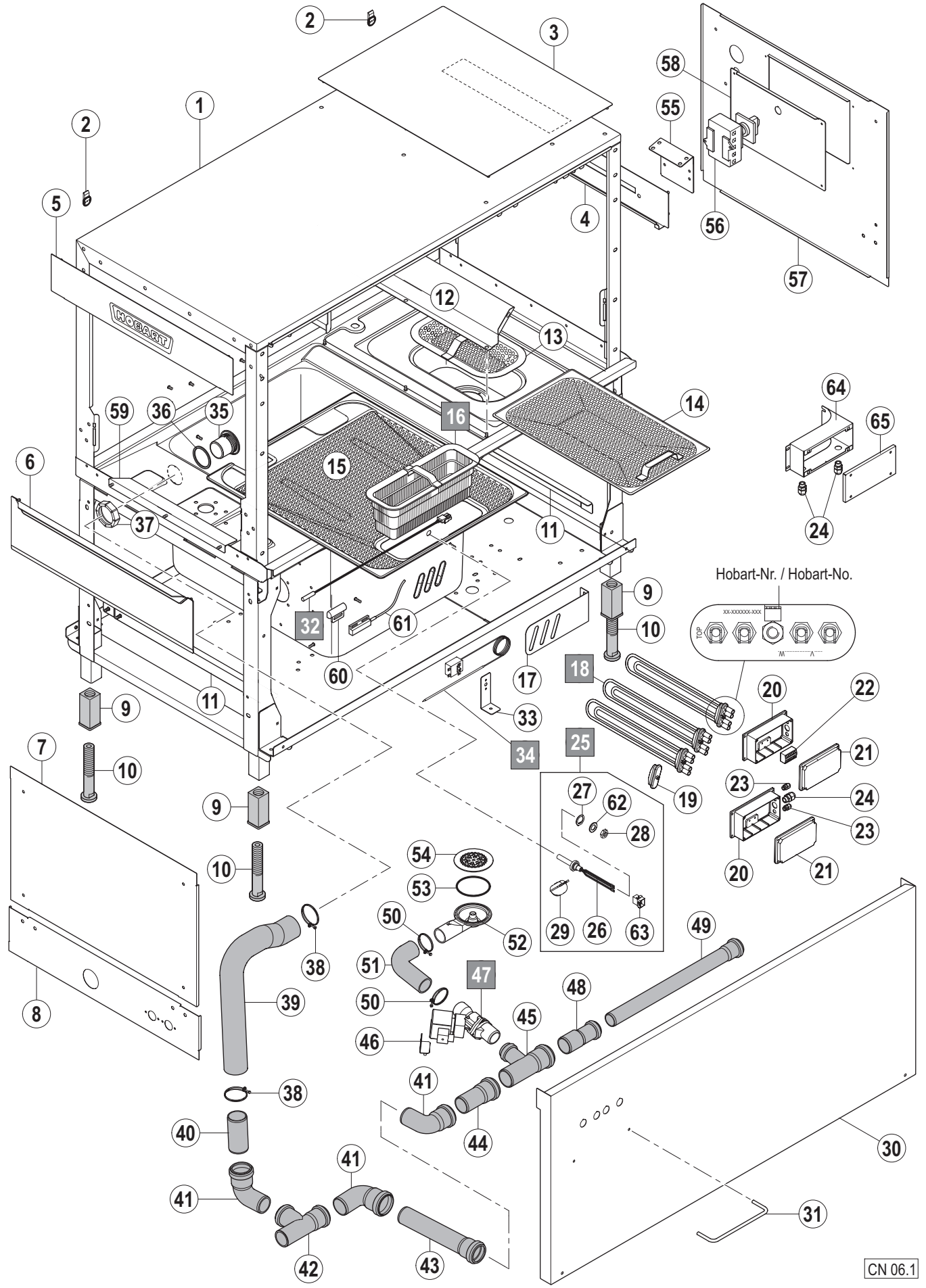
Hobart-Nr. / Hobart-No.
CN 06.1

A Laufrichtung / Working direction / Sens de marche

B Maschinen-Grundtyp / Basic machine / Machine de base

X Länge / Length / Longueur

Pos.	A	B			X [mm]	Bemerkung / Remarks / Remarques
		CS	CN	CP		
01	L/R	01-245399-005	01-245399-001	01-245399-003		
	R/L	01-245399-006	01-245399-002	01-245399-004		
02		00-325037-001	---	---		
03		01-291799-001	---	---		
04		01-291434-001	=	=		
05		01-291497-001	---	---		
06		01-291429-001	=	=		
07	L/R	01-291409-001	=	=		
	R/L	01-291409-002	=	=		
08	L/R	01-291408-001	=	=		
	R/L	01-291408-002	=	=		
09		00-325008-001	=	=		
10		00-325007-001	=	=		
11		01-291432-001	=	=		
12		01-245042-001	=	=		
13		00-325074-001	=	---		
14		---	---	01-245118-010		
15	L/R	01-245047-006	=	=		
	R/L	01-245047-005	=	=		
16		01-245170-010	=	=		
17		01-245372-002	=	=		
18		00-324637-…	00-324637-…			siehe Schaltplan / see wiring diagram / voir schéma de câblage
19		00-774808-001	=	=		
20		---	01-245373-001	=		
21		---	01-245374-001	=		
22		---	00-325025-000	=		
23		---	00-695661-001	=		
24		---	00-695661-003	=		
25		01-245621-003	01-245621-002	=		
26		00-226282-012	01-296000-001	=		
27		00-112467-000	=	=		
28		00-602476-000	=	=		
29		00-122674-000	=	=		
30	L/R	01-291787-001	01-291787-005	01-291407-010		mit Vorwaschung / with prewash / avec prélavage
	R/L	01-291787-002	01-291787-006	01-291407-010		mit Vorwaschung / with prewash / avec prélavage
		---	01-291787-004	---		ohne Vorwaschung / without prewash / sans prélavage
31		00-895734-001	---	---		
32		---	01-240288-001	=		
33		00-895758-001	---	---		
34		00-226505-…	---	---		
35		01-245112-001	=	=		
36		01-245460-001	=	=		
37		01-245165-001	=	=		
38		00-323945-064	=	=		
39		01-291519-001	=	=		
40		00-325737-007	=	=		
41		00-230080-001	=	=		
42		00-230079-001	=	=		
43		00-229679-006	=	=		
44		00-229679-013	=	=		

Pos.	A	B			X [mm]	Bemerkung / Remarks / Remarques
		CS	CN	CP		
45		00-323593-002	=	=		
46		01-291684-001	=	=		
47		00-774683-…	=	=		siehe Schaltplan / see wiring diagram / voir schéma de câblage
48		00-325708-001	=	=		
49		00-325706-017	=	=		
50		00-323945-053	=	=		
51		01-291527-001	=	=		
52		01-245109-001	=	=		
53		01-245340-004	=	=		
54		01-245107-001	=	=		
55		01-291425-001	=	---		
56		00-785574-…	=	---		siehe Schaltplan / see wiring diagram / voir schéma de câblage
57	L/R	01-296274-001	=	---		
	R/L	01-296274-002	=	---		
58		01-291427-001	=	---		
59		00-895737-001	---	---		
60		---	00-883838-001	---		
61		00-229517-000	---	---		
62		---	00-168611-021	=		
63		---	00-174994-013	---		
64	L/R	---	---	01-245657-001		
	R/L	---	---	01-245657-002		
65		---	---	01-245656-002		

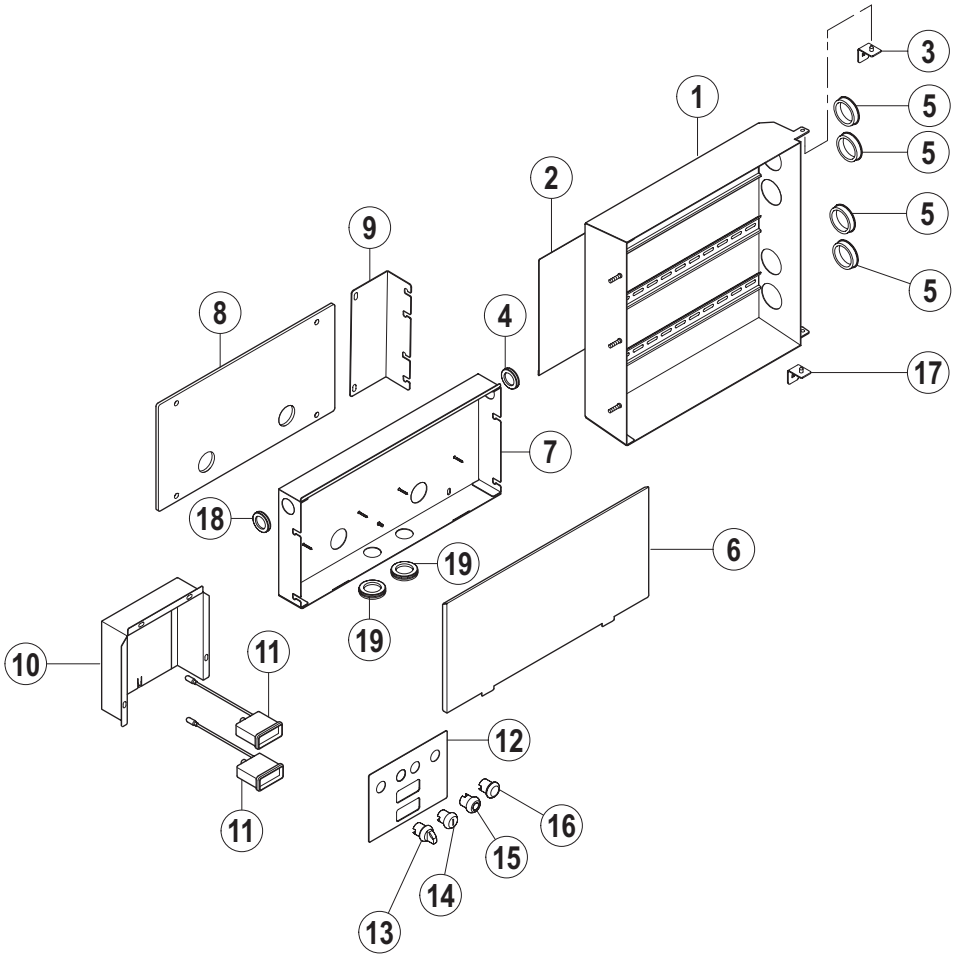

CN 06.2

A Laufrichtung / Working direction / Sens de marche

B Maschinen-Grundtyp / Basic machine / Machine de base

X Länge / Length / Longueur

Pos.	A	B			X [mm]	Bemerkung / Remarks / Remarques
		CS	CN	CP		
01		01-291422-001	=	---		
02		00-374384-000	=	---		
03		01-245228-002	=	---		
04		00-785565-004	=	---		
05		00-886756-001	=	---		
06		00-895732-001	=	---		
07		01-291424-001	=	---		
08		01-291499-001	=	---		
09		01-291786-001	---	---		
10		00-899256-001	---	---		
11		00-228720-003	---	---		
12		01-291809-001	---	---		ohne / wihout / sans Pos.11
		01-291809-002	---	---		mit / with / avec Pos.11
13		00-8870015-61	---	---		
14		00-887015-033	---	---		
15		00-887015-021	---	---		
16		00-887015-047	---	---		
17		01-245228-003	=	---		
18		00-227748-004	=	---		
19		00-785565-005	=	---		

CS / CN / CP

ND Modul

ND Module

ND Module

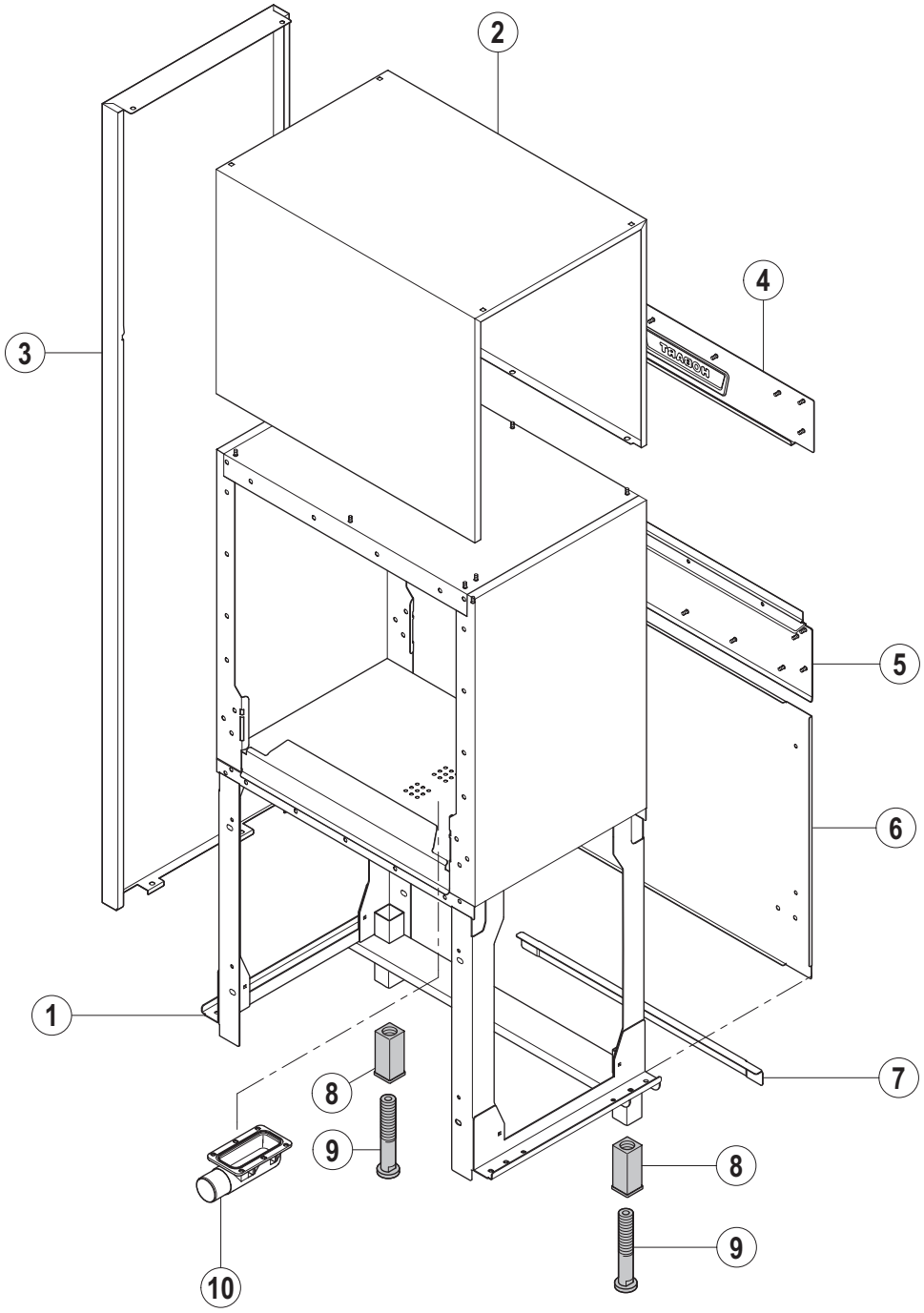

CN 07.1

A Laufrichtung / Working direction / Sens de marche

B Maschinen-Grundtyp / Basic machine / Machine de base

X Länge / Length / Longueur

Pos.	A	B			X [mm]	Bemerkung / Remarks / Remarques
		CS	CN	CP		
01		---	01-291518-002	=		
02		---	01-291673-001	=		
03		---	01-291466-003	=		mit Trocknung / with dryer / avec séchage
		---	01-291466-004	=		ohne Trocknung / without dryer / sans séchage
04		---	01-291497-001	=		
05		---	01-291429-002	=		
06		---	01-291419-003	=		
07		---	01-291432-001	=		
08		---	00-325008-001	=		
09		---	00-325007-001	=		
10		---	00-325529-001	=		

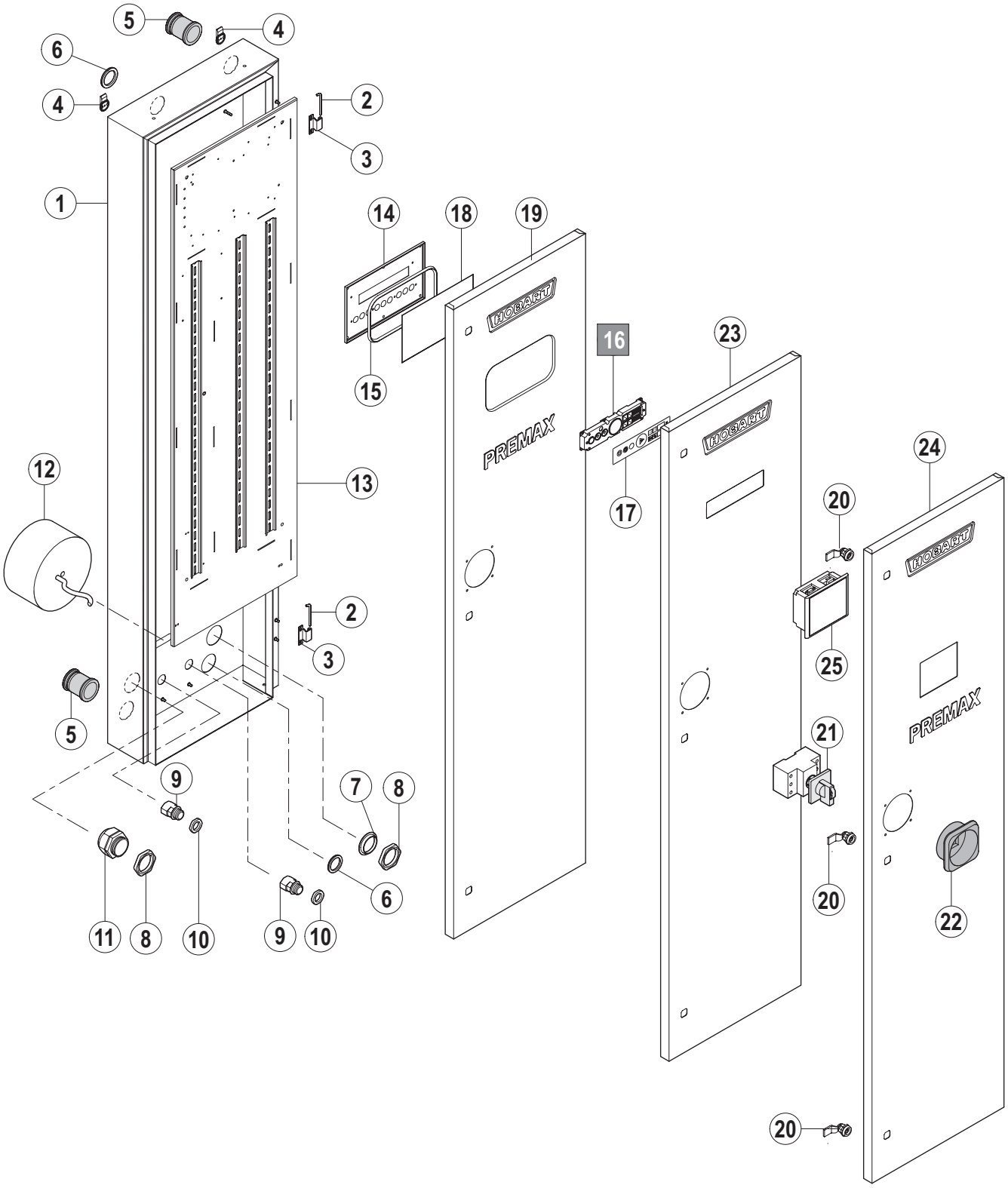
5
4
6
4
2
3
1
14
18
19
HOBART
PREMAX
16
23
15
12
13
17
24
20
HOBART
2
3
25
5
21
PREMAX
9
7
8
6
20
22
11
8
10
9
10
20

CN 07.2

A Laufrichtung / Working direction / Sens de marche

B Maschinen-Grundtyp / Basic machine / Machine de base

X Länge / Length / Longueur

Pos.	A	B			X [mm]	Bemerkung / Remarks / Remarques
		CS	CN	CP		
01		---	01-291469-002	=		
02		---	00-325086-013	=		
03		---	00-325086-011	=		
04		---	00-325037-001	=		
05		---	00-325186-001	=		
06		---	00-325655-001	=		
07		---	00-695666-007	=		
08		---	00-695664-007	=		
09		---	00-774797-002	=		
10		---	00-695664-004	=		
11		---	00-695661-007	=		
12		---	00-774783-…	=		siehe Schaltplan / see wiring diagram / voir schéma de câblage
13		---	00-868499-003	=		
14		---	01-245672-001	=		
15		---	00-325554-004	=		
16		---	00-897540-002	---		
17		---	01-291845-001	---		
18		---	01-245674-002	=		
19		---	01-291472-001	01-291472-002		
20		---	00-229518-001	=		
21		---	00-301773-…	=		siehe Schaltplan / see wiring diagram / voir schéma de câblage
22		---	00-734115-002	00-734115-003		
23		---	01-291472-003	---		
24		---	01-291472-005	01-291472-004		
25		---	00-887104-002	00-887104-001		

CS / CN / CP

Spülmodul

Rinse module

Module de rinçage

08.1

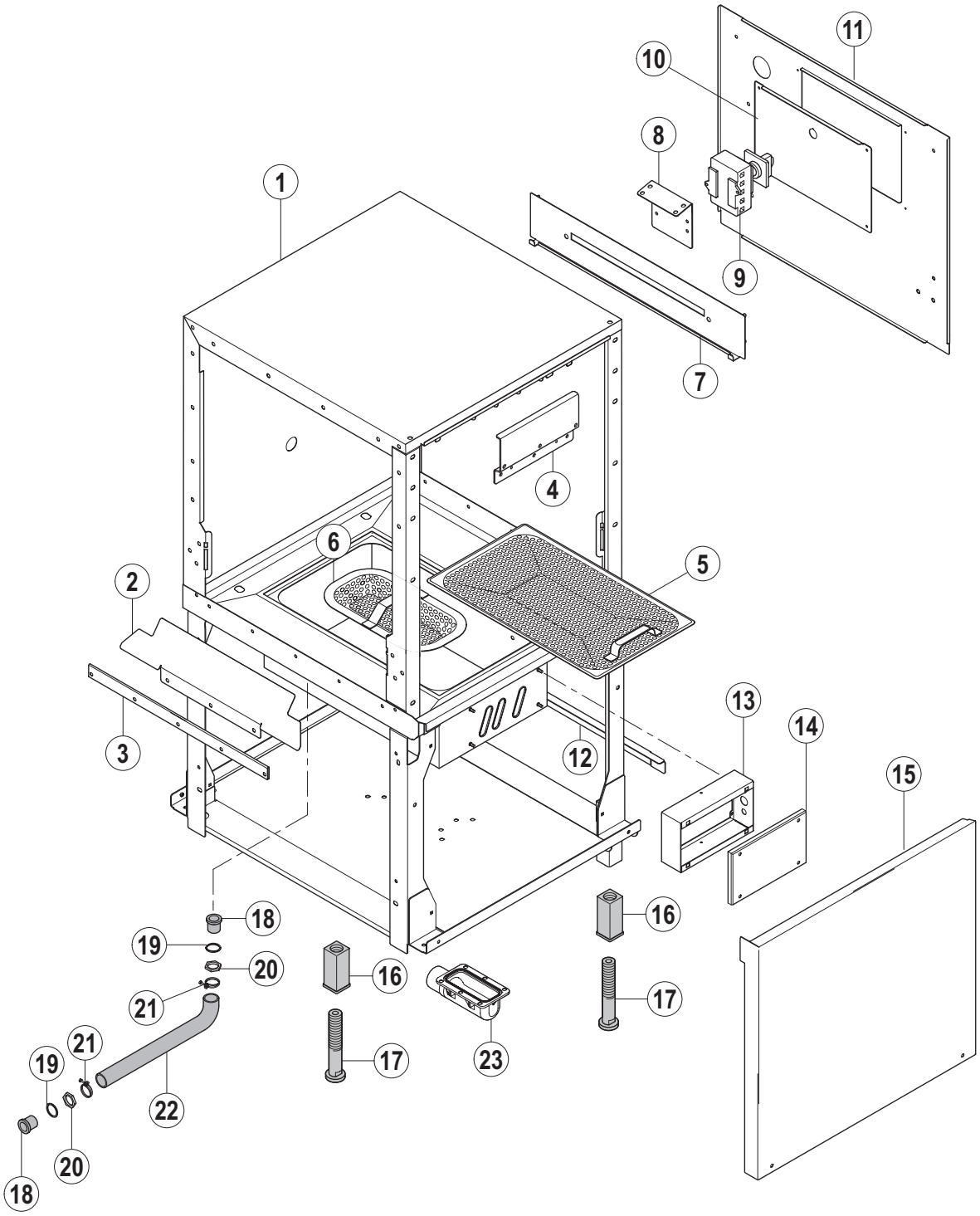

CN 08.1

A Laufrichtung / Working direction / Sens de marche

B Maschinen-Grundtyp / Basic machine / Machine de base

X Länge / Length / Longueur

Pos.	A	B			X [mm]	Bemerkung / Remarks / Remarques
		CS	CN	CP		
01	L/R	---	01-291880-001	01-291880-003		
	R/L		01-291880-002	01-291880-004		
02		---	00-896430-003	=		
03		---	00-325155-003	=		
04		---	01-245279-002	=		
05		---	---	01-245118-010		
06		---	00-868460-001	---		
07		---	01-291434-001	=		
08		---	01-291425-002	---		
09		---	00-785574-…	---		siehe Schaltplan / see wiring diagram / voir schéma de câblage
10		---	01-291427-001	---		
11	L/R	---	01-291419-001	---		
	R/L		01-291419-002	---		
12		---	01-291432-011	=		
13		---	---	01-245655-002		
14		---	---	01-245656-004		
15	L/R	---	01-291407-007	01-291407-008		
	R/L		01-291407-006	01-291407-008		
16		---	00-325008-001	=		
17		---	00-325007-001	=		
18		---	00-229446-003	=		
19		---	00-168611-011	=		
20		---	00-172739-002	=		
21		---	00-323945-033	=		
22		---	00-898242-003	=		
23		---	00-325529-001	=		
24		---	01-240288-001	=		
25		---	00-883838-001	=		

CS / CN / CP

Trennmodul

Disconnecting module

Module de passage

VERSION 27.04.2009

09.1

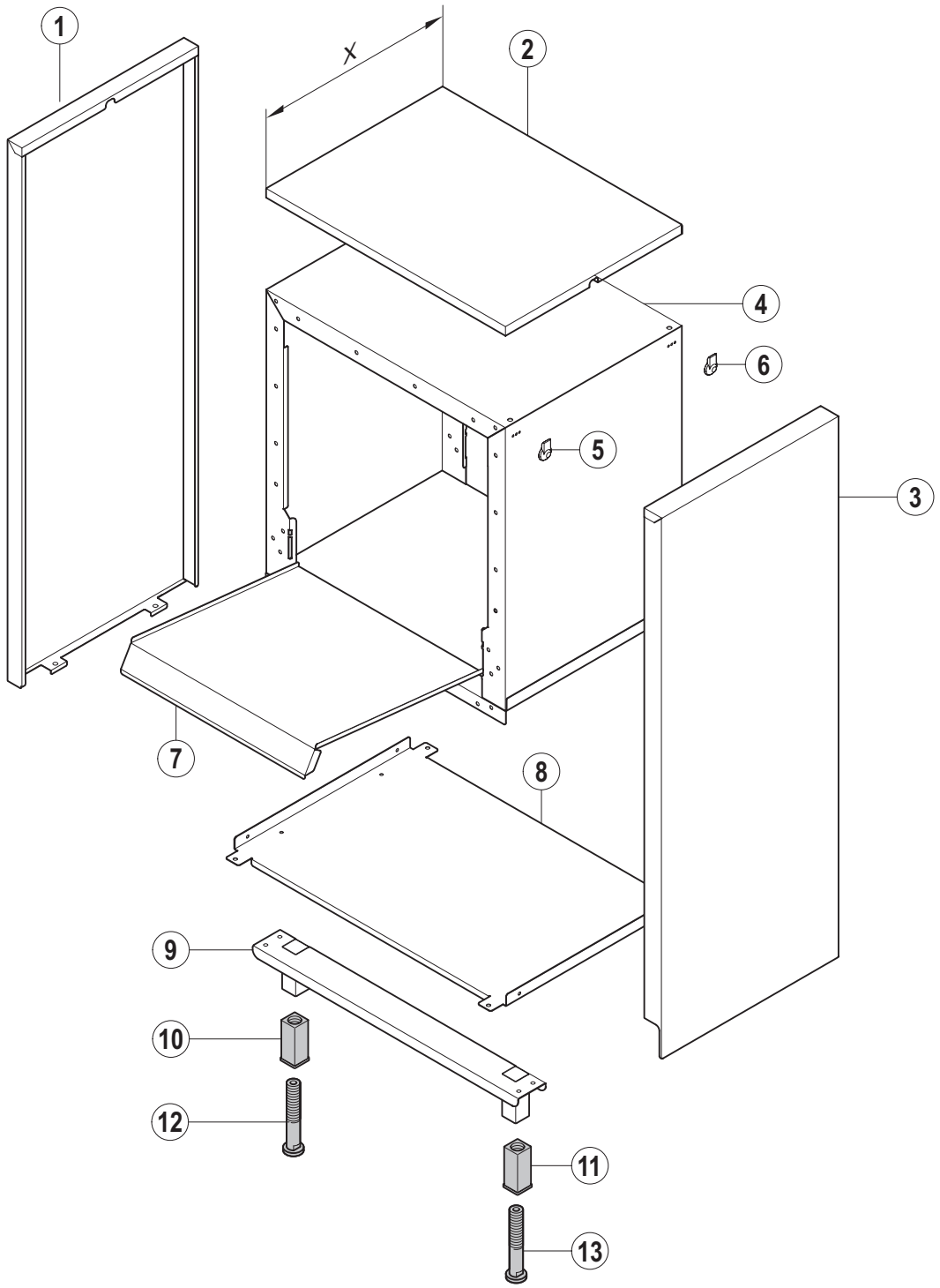

CN 09.1

A Laufrichtung / Working direction / Sens de marche

B Maschinen-Grundtyp / Basic machine / Machine de base

X Länge / Length / Longueur

Pos.	A	B			X [mm]	Bemerkung / Remarks / Remarques
		CS	CN	CP		
01		---	01-291317-004	=	500	
		---	01-291317-008	=	300	
02		---	01-291397-004	=	500	
		---	01-291397-007	=	300	
03		---	01-291866-001	=	500	
		---	01-291866-002	=	300	
04		---	01-291860-001	=	500	
		---	01-291860-002	=	300	
05		---	00-325037-001	=		
06		---	01-291857-001	=	500	
		---	01-291857-002	=	300	
07		---	01-291856-001	=	500	
		---	01-291856-002	=	300	
08		---	01-291366-005	=		
09		---	00-325008-001	=		
10		---	00-325007-001	=		

CS / CN / CP

Waschsystem

Wash system

Système de lavage

10.1

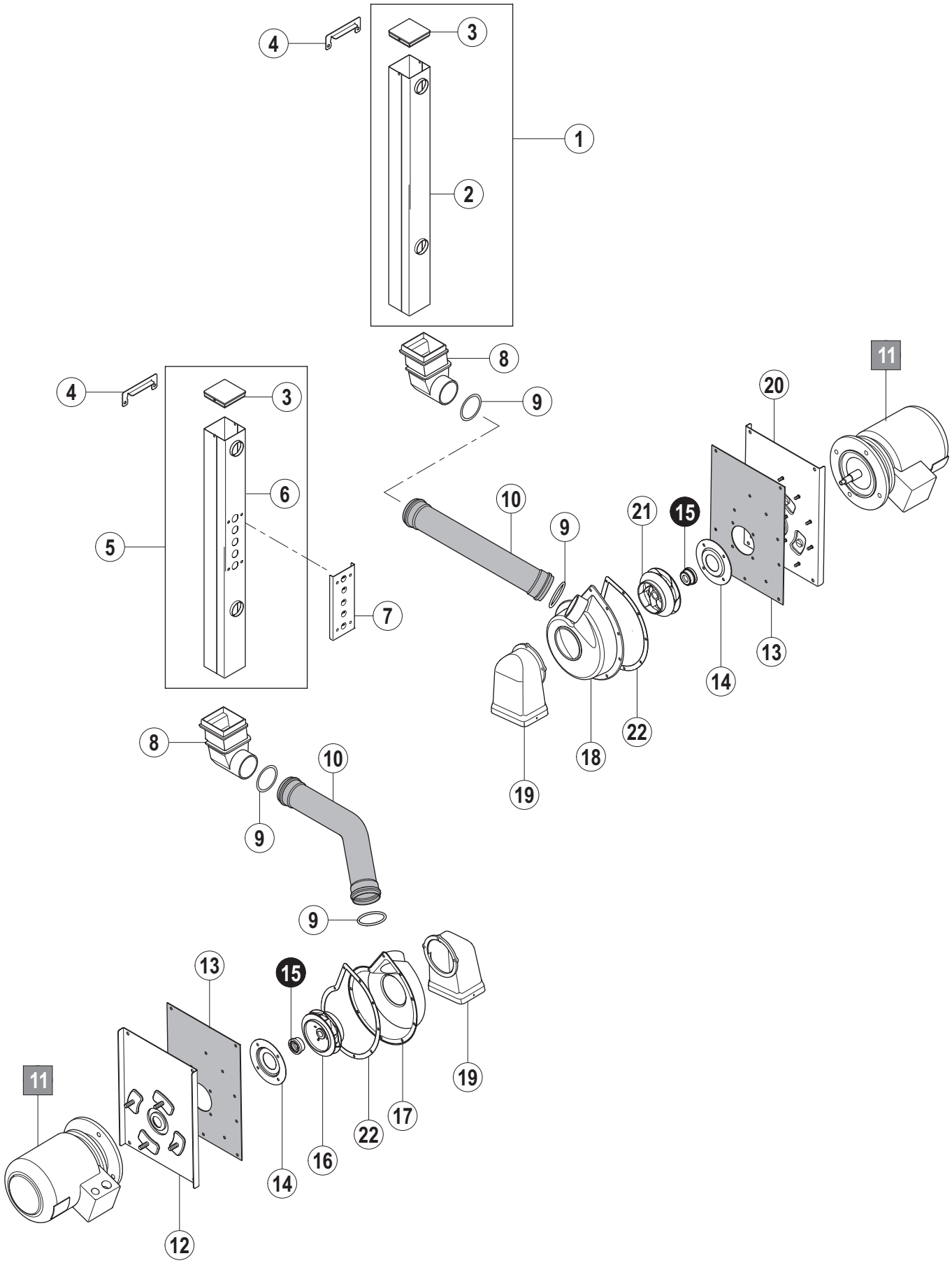
4
3
1
2
8
9
11
20
4
3
6
5
7
10
9
21
15
13
14
22
18
19
8
10
9
9
13
15
11
19
17
22
16
14
12

CN 10.1

A Laufrichtung / Working direction / Sens de marche

B Maschinen-Grundtyp / Basic machine / Machine de base

X Länge / Length / Longueur

Pos.	A	B			X [mm]	Bemerkung / Remarks / Remarques
		CS	CN	CP		
01		01-245669-005	=	=		
02		01-245110-005	=	=		
03		01-245086-002	=	=		
04		01-245979-001	=	=		
05		---	01-245669-008	=		
06		---	01-245110-008	=		
07		---	01-245428-002	=		
08		01-245055-001	=	=		
09		01-245340-003	=	=		
10		01-245277-001	=	=		
11		01-245176-…	=	=		siehe Schaltplan / see wiring diagram / voir schéma de câblage
12		01-245835-003	=	=		
13		01-245386-002	=	=		
14		01-245379-001	=	=		
15		01-245033-002	=	=		
16		01-245162-004	01-245162-003	01-245162-003		S-Modul; AR-Modul
		01-245162-004	=	=		L-Modul
17		01-245135-004	=	=		
18		01-245135-005	=	=		
19		01-245713-001	=	=		
20		01-245835-004	=	=		
21		01-245088-004	01-245088-003	01-245088-003		S-Modul; AR-Modul
		01-245088-004	=	=		L-Modul
22		01-245459-001	=	=		

10.2

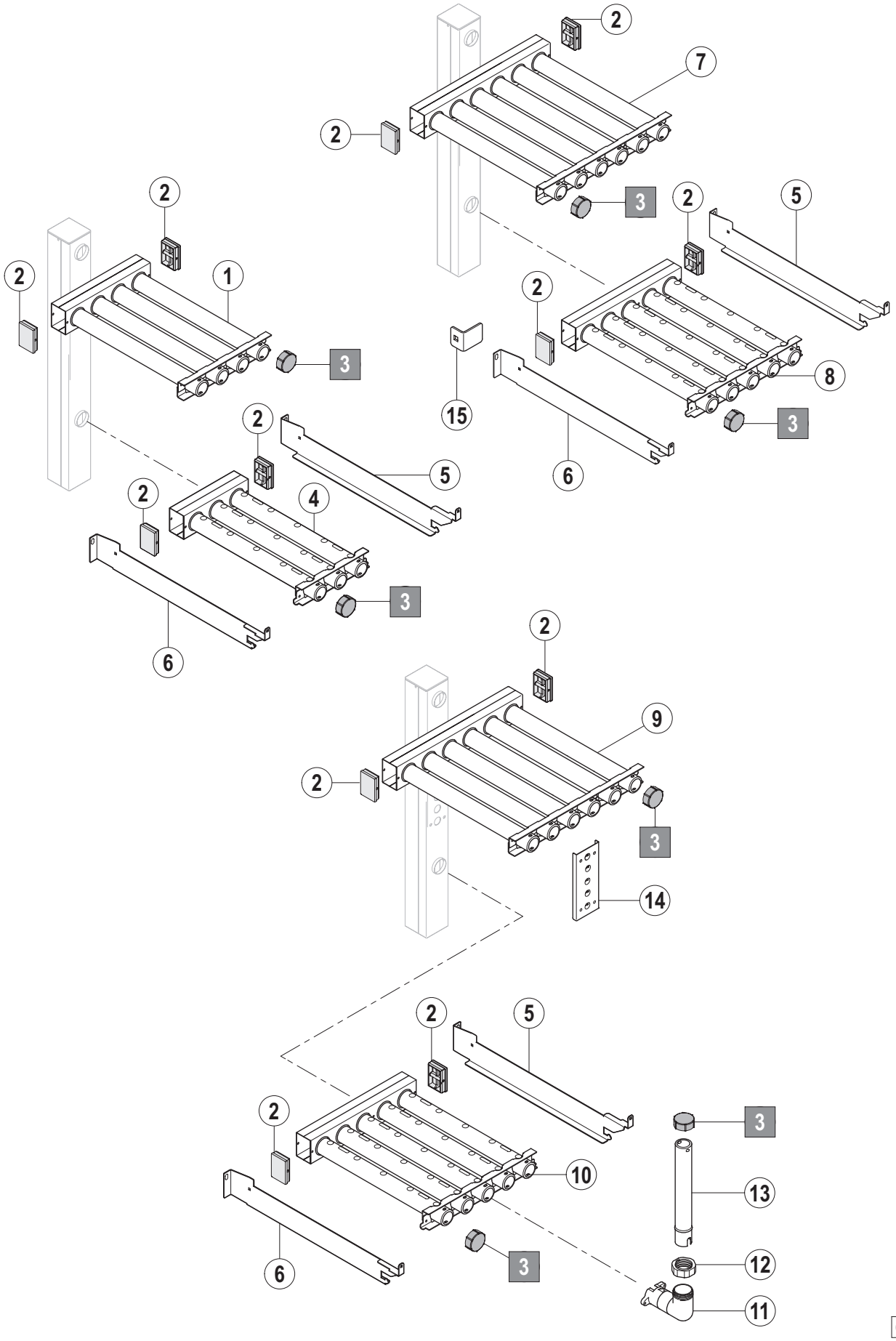

CN 10.2

A Laufrichtung / Working direction / Sens de marche

B Maschinen-Grundtyp / Basic machine / Machine de base

X Länge / Length / Longueur

Pos.	A	B			X [mm]	Bemerkung / Remarks / Remarques
		CS	CN	CP		
01	L/R	01-291302-009	---	---		AR-Modul
	R/L	01-291302-011	---	---		AR-Modul
	L/R	---	01-291302-005	=		L-Modul
	R/L	---	01-291302-007	=		L-Modul
	L/R	---	01-291302-017	=		C-Modul
	R/L	---	01-291302-019	=		C-Modul
02		01-245086-001	=	=		
03		01-245084-001	=	=		
04	L/R	01-291302-010	---	---		AR-Modul
	R/L	01-291302-012	---	---		AR-Modul
	L/R	---	01-291302-006	=		L-Modul
	R/L	---	01-291302-008	=		L-Modul
	L/R	---	01-291302-018	=		C-Modul
	R/L	---	01-291302-020	=		C-Modul
05		01-291358-001	=	=		
06		01-291358-002	=	=		
07	L/R	---	01-291302-001	=		AR-Modul, S-Modul
	R/L	---	01-291302-003	=		AR-Modul, S-Modul
08	L/R	---	01-291302-002	=		AR-Modul, S-Modul
	R/L	---	01-291302-004	=		AR-Modul, S-Modul
09	L/R	---	01-291302-015	=		AR-Modul
	R/L	---	01-291302-016	=		AR-Modul
10	L/R	---	01-291302-013	=		AR-Modul
	R/L	---	01-291302-014	=		AR-Modul
11		---	01-296040-001	=		
12		---	01-245424-001	=		
13	L/R	---	01-291869-001	=		
	R/L	---	01-291869-002	=		
14		---	01-245428-002	=		
15		---	01-291886-001	=		

CS / CN / CP

Erhitzer

Booster

Chaudière

11.1

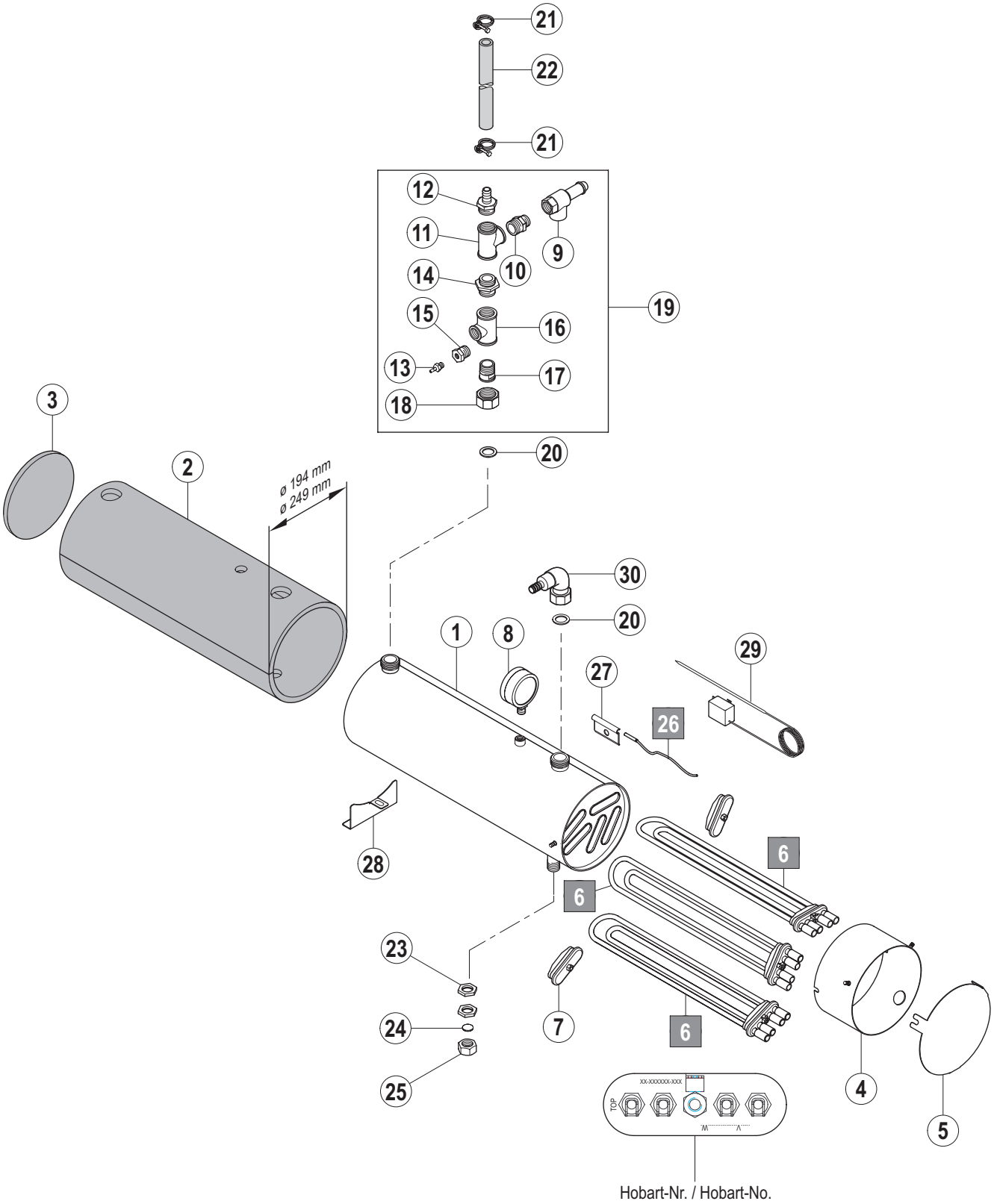
21
22
21
12
11
10
9
14
15
16
19
13
17
18
3
2
ø 194 mm
ø 249 mm
20
30
20
1
8
29
27
26
28
6
6
23
7
6
24
25
4
5
TOP
Hobart-Nr. / Hobart-No.

CN 11.1

A Laufrichtung / Working direction / Sens de marche

B Maschinen-Grundtyp / Basic machine / Machine de base

X Länge / Length / Longueur

Pos.	A	B			X [mm]	Bemerkung / Remarks / Remarques
		CS	CN	CP		
01		00-897683-001	=	=	Ø194	mit Isolierung / with insulation / avec isolation
		01-241873-001	=	=	Ø249	mit Isolierung / with insulation / avec isolation
02		00-897657-001	=	=	Ø194	
		01-241874-001	=	=	Ø249	
03		00-897657-002	=	=	Ø194	
		01-241876-001	=	=	Ø249	
04		01-249044-001	=	=	Ø194	
		01-249044-002	=	=	Ø249	
05		01-249043-001	=	=	Ø194	
		01-249043-002	=	=	Ø249	
06		00-324637-…	=	=		Nr. siehe Flansch / no. see flange / no. voir bride
07		00-774808-001	=	=		
08		00-229583-001	=	=		
09		00-229621-000	=	=		
10		00-602757-000	=	=		
11		00-603163-000	=	=		
12		00-897680-001	=	=		
13		00-227249-003	=	=		
14		00-227931-000	=	=		
15		01-291287-001	=	=		
16		01-291288-001	=	=		
17		01-291286-001	=	=		
18		00-600806-000	=	=		
19		01-244435-002	=	=		
20		00-168611-003	=	=		
21		00-323945-022	=	=		
22		01-245571-002	=	=		L=2000 mm
23		00-172739-001	=	=		
24		00-168611-022	=	=		
25		00-600588-000	=	=		
26		---	00-775612-001	=		
27		00-775489-001	=	=		
28		01-243201-001	=	=		
29		00-226-505-004	---	---		
30		01-245560-001	=	=		

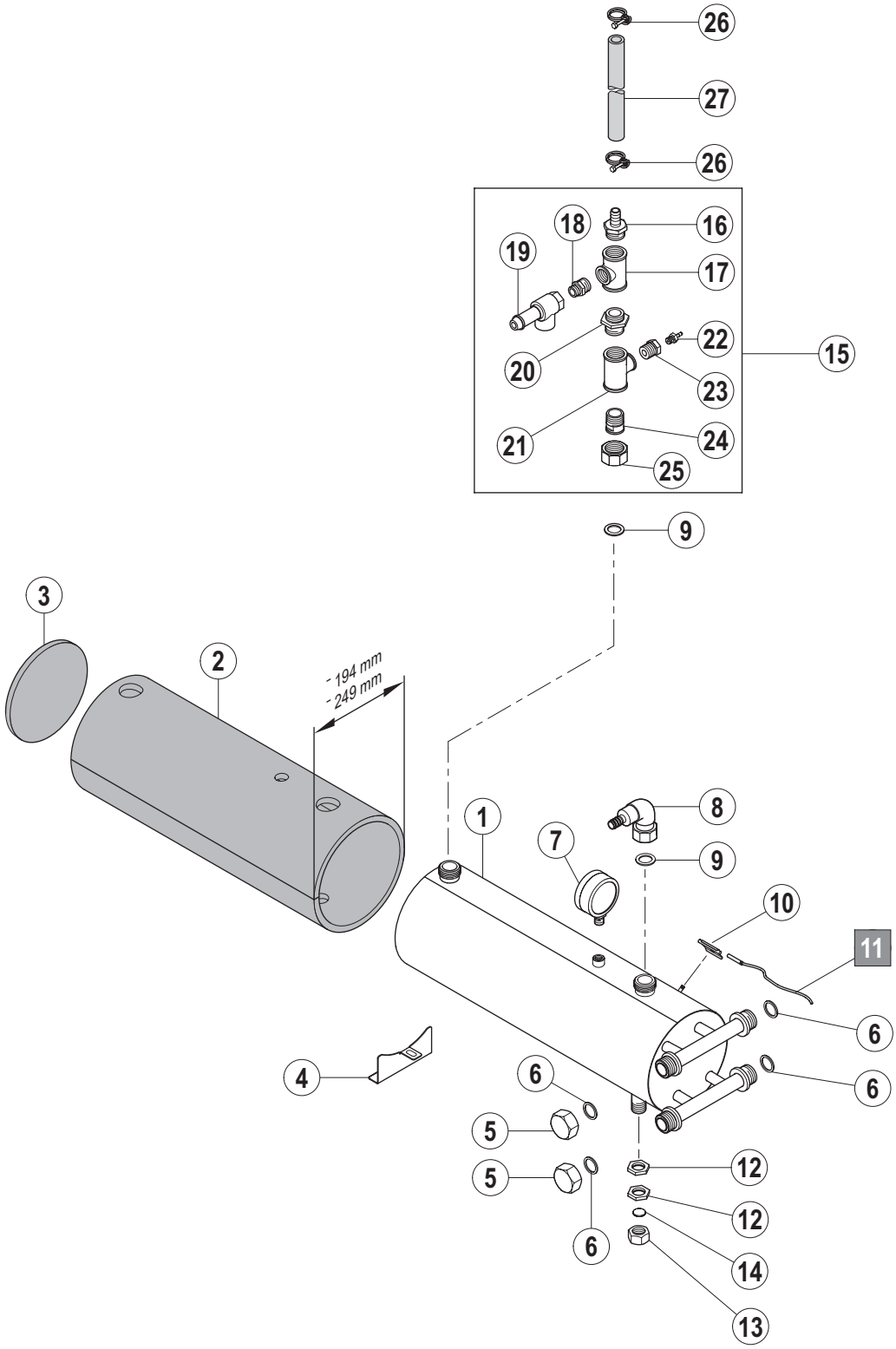
26
27
26
18
16
19
17
22
15
20
23
21
24
25
9
3
2
194 mm
249 mm
1
8
7
9
10
11
6
4
6
6
5
12
5
12
6
14
13

CN 11.2

A Laufrichtung / Working direction / Sens de marche

B Maschinen-Grundtyp / Basic machine / Machine de base

X Länge / Length / Longueur

Pos.	A	B			X [mm]	Bemerkung / Remarks / Remarques
		CS	CN	CP		
01		---	01-245602-002	=	Ø194	mit Isolierung / with insulation / avec isolation
		---	01-245951-002	=	Ø249	mit Isolierung / with insulation / avec isolation
02		---	00-897657-001	=	Ø194	
		---	01-241874-001	=	Ø249	
03		---	00-897657-002	=	Ø194	
		---	01-241876-001	=	Ø249	
04		---	01-243201-001	=		
05		---	01-245605-001	=		
06		---	00-302574-014	=		
07		---	00-229583-001	=		
08		---	01-245560-001	=		
09		---	00-168611-003	=		
10		---	00-775489-001	=		
11		---	00-775612-001	=		
12		---	00-172739-001	=		
13		---	00-600588-000	=		
14		---	00-168611-022	=		
15		---	01-244435-002	=		
16		---	00-897680-001	=		
17		---	00-603163-000	=		
18		---	00-602757-000	=		
19		---	00-229621-000	=		
20		---	00-227931-000	=		
21		---	01-291288-001	=		
22		---	00-227249-003	=		
23		---	01-291287-001	=		
24		---	01-291286-001	=		
25		---	00-600806-000	=		
26		---	00-323945-022	=		
27		---	01-245571-002	=		L=2000 mm

CS / CN / CP

Spülsystem

Rinse system

Système de rinçage

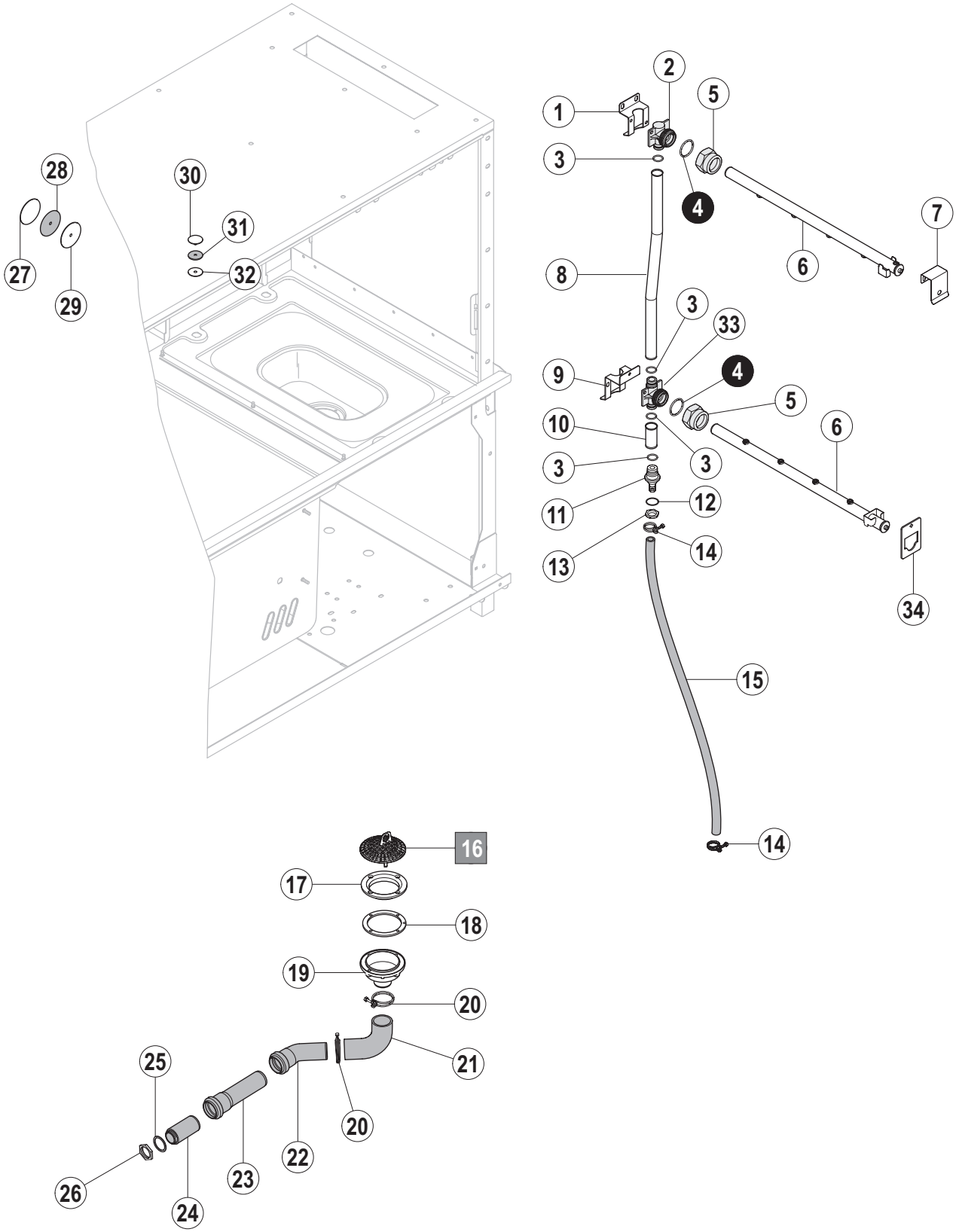
1
2
3
4
5
6
7
8
9
10
11
12
13
14
15
16
17
18
19
20
21
22
23
24
25
26
27
28
29
30
31
32
33
34

CN 12.1

A Laufrichtung / Working direction / Sens de marche

B Maschinen-Grundtyp / Basic machine / Machine de base

X Länge / Length / Longueur

Pos.	A	B			X [mm]	Bemerkung / Remarks / Remarques
		CS	CN	CP		
01		01-291337-001	=	---		
02		01-245318-002	=	---		
03		01-245340-001	=	---		
04		00-884505-002	=	---		
05		00-885572-001	=	---		
06		01-291340-001	=	---		
07		01-245062-001	=	---		
08		01-245323-003	=	---		
09		01-291341-001	=	---		
10		01-291297-001	=	---		
11		01-245329-001	=	---		
12		01-245340-002	=	---		
13		01-172739-009	=	---		
14		00-323945-022	=	---		
15		01-245571-001	=	---		
16		00-775750-001	=	---		
17		00-324053-000	=	---		
18		00-324056-000	=	---		
19		01-291536-001	=	---		
20		00-323945-053	=	---		
21		01-291527-002	=	---		
22		00-377340-003	=	---		
23		00-325706-013	=	---		
24		00-774616-001	=	---		
25		00-172986-028	=	---		
26		00-172739-008	=	---		
27		00-869137-001	=	---		
28		00-168611-023	=	---		
29		00-696943-014	=	---		
30		00-869137-003	=	---		
31		00-168611-024	=	---		
32		00-696943-030	=	---		
33		01-245318-001	=	---		
34		01-245351-001	=	---		

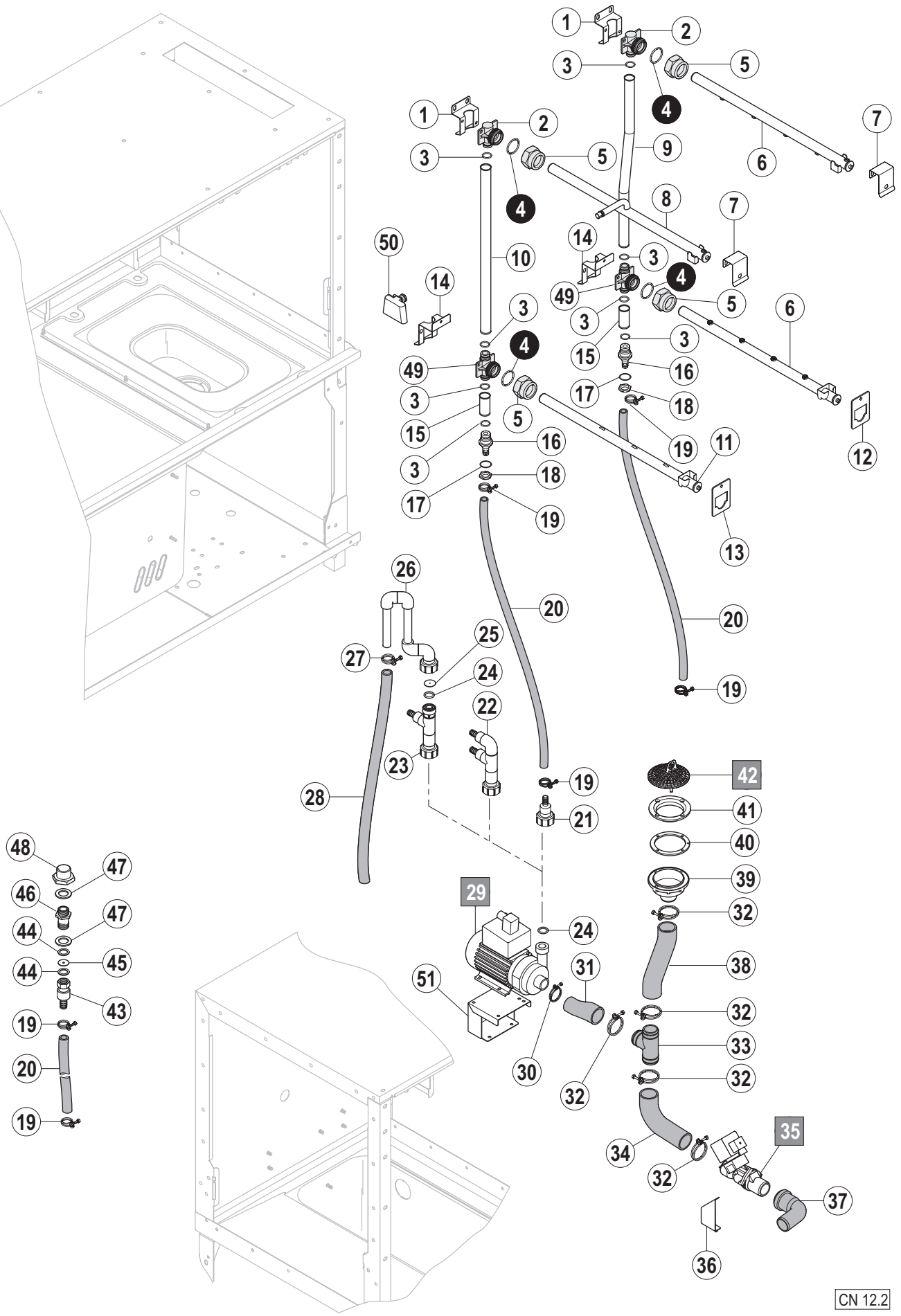
1
2
3
4
5
6
7
8
9
10
11
12
13
14
15
16
17
18
19
20
21
22
23
24
25
26
27
28
29
30
31
32
33
34
35
36
37
38
39
40
41
42
43
44
45
46
47
48
49
50
51
CN 12.2

Pos.	A	B			X [mm]	Bemerkung / Remarks / Remarques
		CS	CN	CP		
01		01-291337-001	=	---		
02		01-245318-002	=	---		
03		01-245340-001	=	---		
04		00-884505-002	=	---		
05		00-885572-001	=	---		
06		01-291340-001	=	---		
07		01-245062-001	=	---		
08		01-291305-001	=	---		Duo-Spülung / dual rinse / double rinçage
	L/R	---	01-291305-002	---		3-fach Spülung / triple rinse / triple rinçage
	R/L	---	01-291305-003	---		3-fach Spülung / triple rinse / triple rinçage
09		01-245323-003	=	---		
10		01-291297-002	=	---		
11		01-291305-001	=	---		
12		01-291351-001	=	---		
13	L/R	01-291351-002	=	---		
	R/L	01-291351-003	=	---		
14		01-291341-001	=	---		
15		01-291297-001	=	---		
16		01-245329-001	=	---		
17		01-245340-002	=	---		
18		00-172739-009	=	---		
19		00-323945-022	=	---		
20		01-245571-001	=	---		L=1000 mm
21		00-895735-001	=	---		
22		---	01-291679-001	---		
23		---	01-291679-002	---		
24		---	00-067500-072	---		
25		---	00-699119-041	---		
26		---	01-245742-001	---		
27		---	00-323945-033	---		
28		---	00-226994-009	---		L=900 mm
29		---	00-323592-…	---		siehe Schaltplan / see wiring diagram / voir schéma de câblage
30		00-323945-040	=	---		
31		01-291526-001	=	---		
32		00-323945-053	=	---		
33		01-291562-001	=	---		
34		01-291527-001	=	---		
35		00-774683-…	=	---		siehe Schaltplan / see wiring diagram / voir schéma de câblage
36		01-291686-001	=	---		
37		00-230080-002	=	---		
38		01-291525-001	=	---		
39		01-291536-001	=	---		
40		00-324056-000	=	---		
41		00-324053-000	=	---		
42		00-775750-001	=	---		
43		---	01-245992-002	---		
44		---	00-172986-034	---		
45		---	01-245857-005	---		
46		---	01-245850-001	---		
47		---	00-172986-027	---		

A Laufrichtung / Working direction / Sens de marche

B Maschinen-Grundtyp / Basic machine / Machine de base

X Länge / Length / Longueur

Pos.	A	B			X [mm]	Bemerkung / Remarks / Remarques
		CS	CN	CP		
48		---	00-774670-001	---		
49		---	01-245318-001	---		
50		00-324858-001	=	---		
51		01-296093-001	=	---		

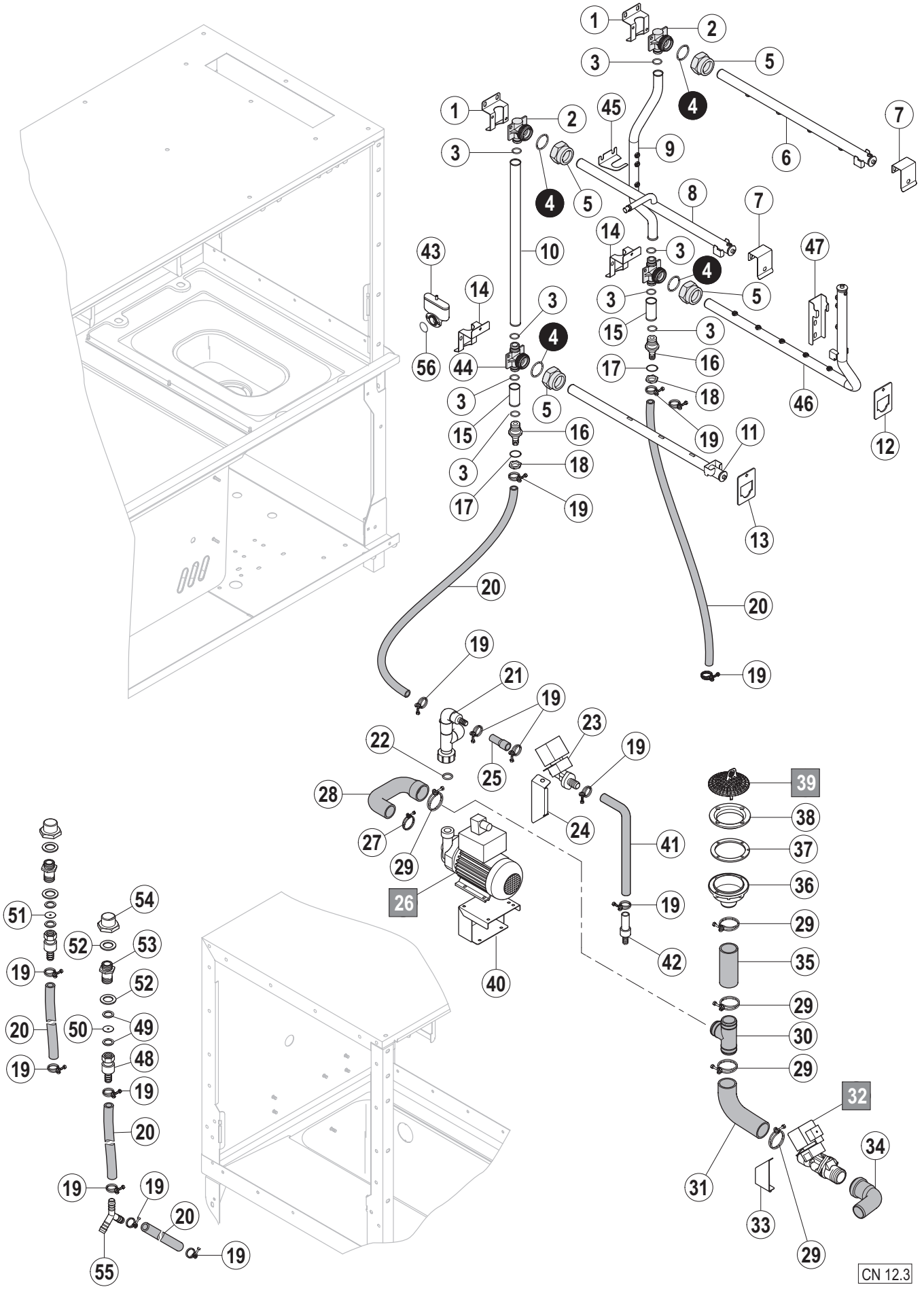
1
2
3
4
5
6
7
8
9
10
11
12
13
14
15
16
17
18
19
20
21
22
23
24
25
26
27
28
29
30
31
32
33
34
35
36
37
38
39
40
41
42
43
44
45
46
47
48
49
50
51
52
53
54
55
56
CN 12.3

A Laufrichtung / Working direction / Sens de marche

B Maschinen-Grundtyp / Basic machine / Machine de base

X Länge / Length / Longueur

Pos.	A	B			X [mm]	Bemerkung / Remarks / Remarques
		CS	CN	CP		
01		---	---	01-291337-001		
02		---	---	01-245318-002		
03		---	---	01-245340-001		
04		---	---	00-884505-002		
05		---	---	00-885572-001		
06		---	---	01-291340-002		
07		---	---	01-245062-001		
08	L/R	---	---	01-291305-002		
	R/L	---	---	01-291305-003		
09	L/R	---	---	01-291353-001		
	R/L	---	---	01-291355-001		
10		---	---	01-291297-002		
11		---	---	01-291305-001		
12		---	---	01-291351-001		
13	L/R	---	---	01-291351-002		
	R/L	---	---	01-291351-003		
14		---	---	01-291341-001		
15		---	---	01-291297-001		
16		---	---	01-245329-001		
17		---	---	01-245340-002		
18		---	---	00-172739-009		
19		---	---	00-323945-022		
20		---	---	01-245571-001		L=1000 mm
21	L/R	---	---	01-291679-003		
	R/L			01-291679-004		
22		---	---	00-067500-072		
23		---	---	00-323592-…		siehe Schaltplan / see wiring diagram / voir schéma de câblage
24	L/R	---	---	01-291689-001		
	R/L	---	---	01-291687-001		
25		---	---	00-887667-002		
26		---	---	00-781237-…		siehe Schaltplan / see wiring diagram / voir schéma de câblage
27		---	---	00-323945-040		
28		---	---	01-291691-001		
29		---	---	00-323945-053		
30		---	---	01-291562-001		
31		---	---	01-291527-001		
32		---	---	00-774683-…		siehe Schaltplan / see wiring diagram / voir schéma de câblage
33		---	---	01-291686-001		
34		---	---	00-230080-002		
35		---	---	01-291525-002		
36		---	---	01-291536-001		
37		---	---	00-324056-000		
38		---	---	00-324053-000		
39		---	---	00-775750-001		
40		---	---	01-296093-001		
41		---	---	00-324077-026		
42		---	---	00-897679-003		
43		---	---	01-240076-002		
44		---	---	01-245318-001		
45		---	---	01-291346-001		

Pos.	A	B			X [mm]	Bemerkung / Remarks / Remarques
		CS	CN	CP		
46	L/R	---	---	01-291345-001		
	R/L	---	---	01-291350-001		
47		---	---	01-291347-001		
48		---	---	01-245992-002		
49		---	---	00-172986-034		
50		---	---	01-245857-003		Blende AR-Waschung / diaphragm AR wash / diaphragme AR lavage
51		---	---	01-245857-004		Blende Vorwaschung / diaphragm prewash / diaphragme prélavage
52		---	---	00-172986-027		
53		---	---	01-245850-001		
54		---	---	00-774670-001		
55		---	---	00-174047-001		
56		---	---	00-276903-056		

CS / CN / CP

Füllsystem

Filling system

Système de remplissage

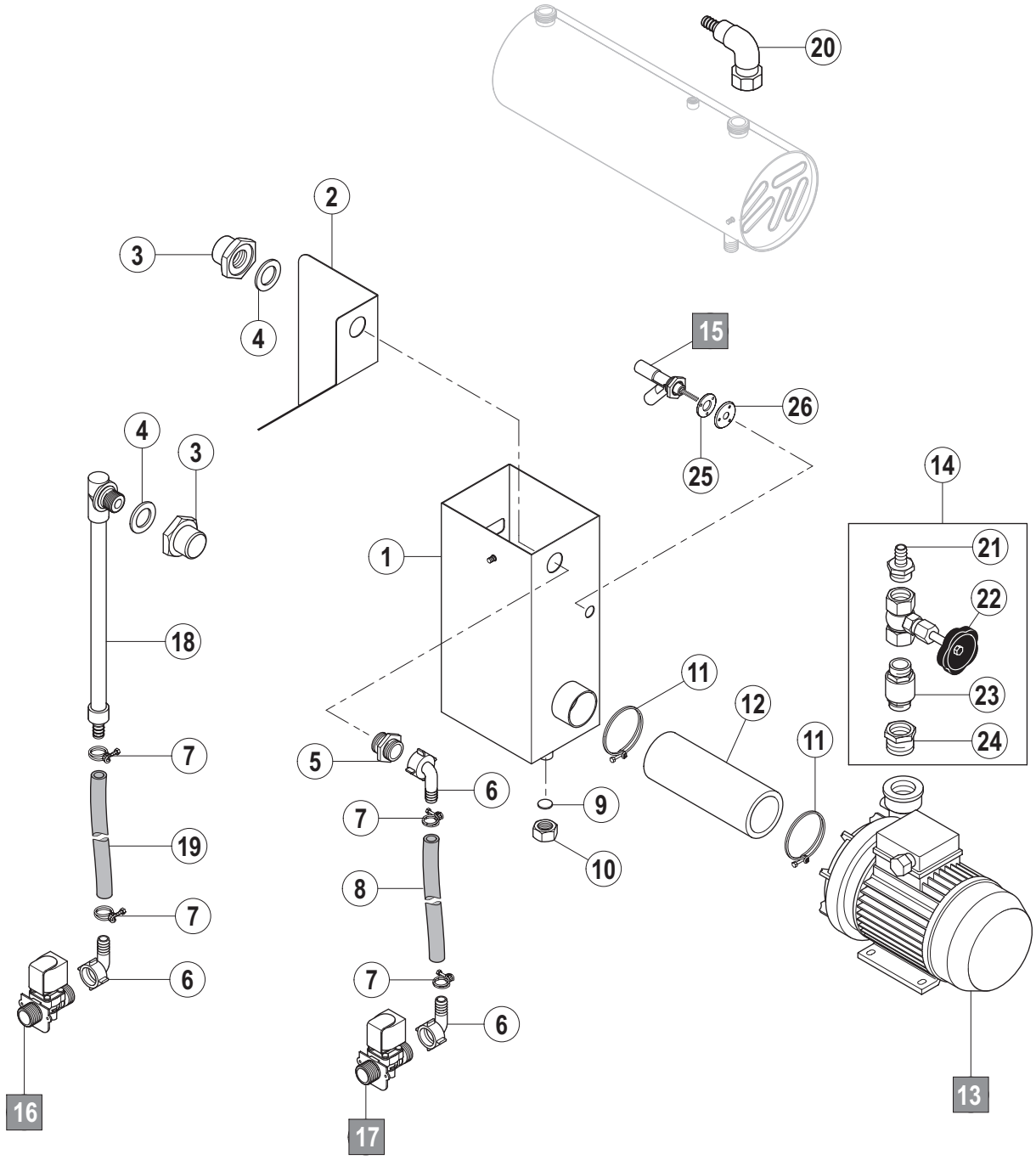
20
2
3
4
15
26
25
4
3
14
1
21
22
18
11
12
23
11
24
7
5
6
9
7
19
10
8
7
6
7
6
16
17
13

CN 13.1

A Laufrichtung / Working direction / Sens de marche

B Maschinen-Grundtyp / Basic machine / Machine de base

X Länge / Length / Longueur

Pos.	A	B			X [mm]	Bemerkung / Remarks / Remarques
		CS	CN	CP		
01		01-291436-001	=	---		
02		01-291662-001	=	---		
03		00-774670-001	=	---		
04		00-172986-027	=	---		
05		00-227931-000	=	---		
06		00-299240-001	=	---		
07		00-323945-022	=	---		
08		01-245571-013	=	---		L=1200 mm
09		00-168611-022	=	---		
10		00-600588-000	=	---		
11		00-323945-064	=	---		
12		00-693255-031	=	---		
13		00-897662-…	=	---		siehe Schaltplan / see wiring diagram / voir schéma de câblage
14		01-241859-001	=	---		
15		00-735171-002	=	---		
16		00-297808-012	=	---		**Warmwasser / hot water / eau chaude**
17		00-297808-010	=	---		**Kaltwasser / cold water / eau froide**
18		00-897686-001	=	---		
19		01-245571-002	=	---		L=2000 mm
20		01-245560-001	=	---		
21		00-897680-001	=	---		
22		01-241853-002	=	---		
23		00-897668-001	=	---		
24		00-603076-000	=	---		
25		00-774034-001	=	---		
26		00-774010-001	=	---		

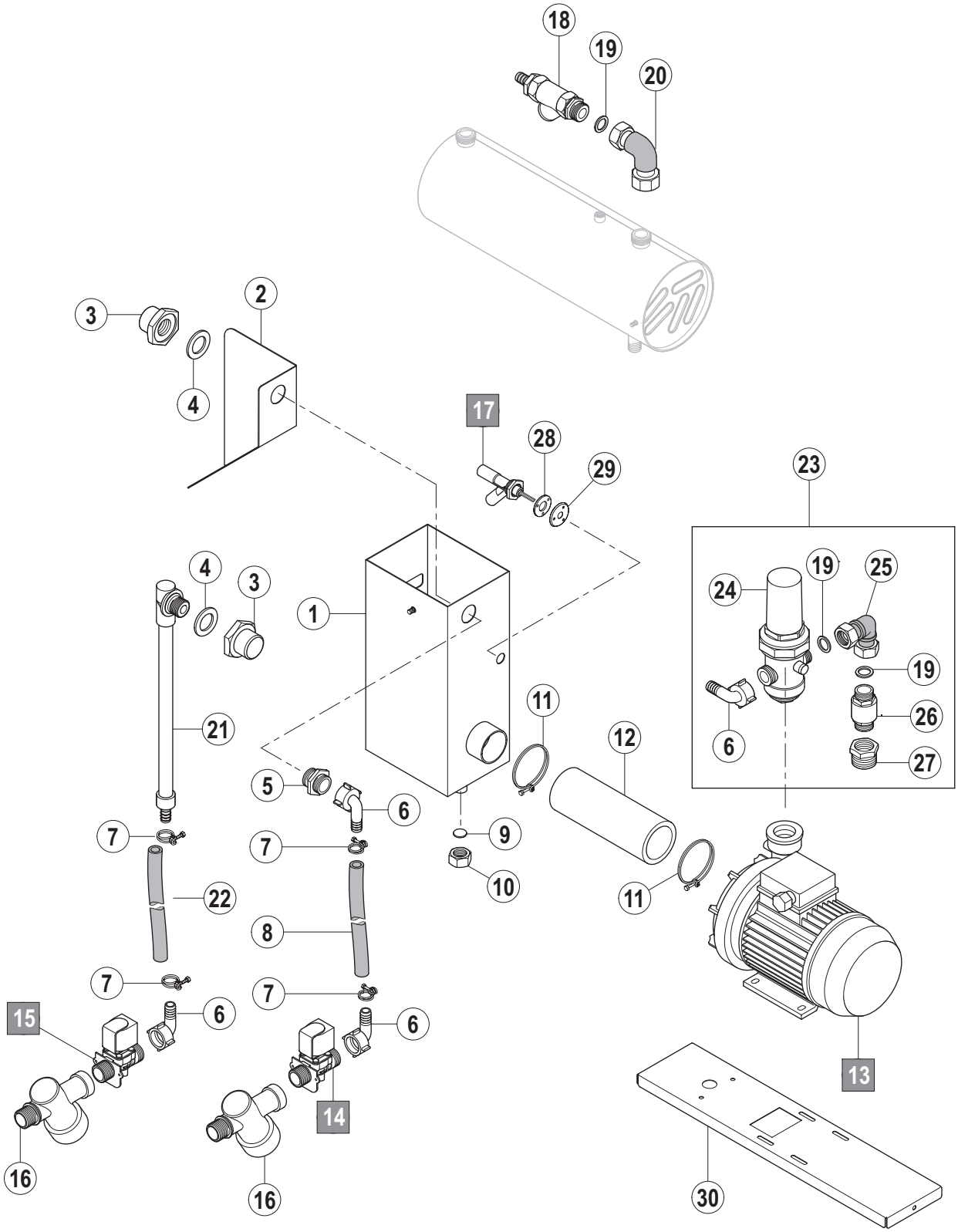
18
19
20
3
2
4
17
28
29
23
13.2
4
3
1
24
19
25
19
21
11
12
26
6
27
5
6
7
9
7
10
22
11
8
7
7
15
6
6
13
14
16
16
30

CN 13.2

A Laufrichtung / Working direction / Sens de marche

B Maschinen-Grundtyp / Basic machine / Machine de base

X Länge / Length / Longueur

Pos.	A	B			X [mm]	Bemerkung / Remarks / Remarques
		CS	CN	CP		
01		---	01-291436-001	=		
02		---	01-291662-001	=		
03		---	00-774670-001	=		
04		---	00-172986-027	=		
05		---	00-227931-000	=		
06		---	00-299240-001	=		
07		---	00-323945-022	=		
08		---	01-245571-013	=		L=1200 mm
09		---	00-168611-022	=		
10		---	00-600588-000	=		
11		---	00-323945-064	=		
12		---	00-693255-031	=		
13		---	00-897662-…	=		siehe Schaltplan / see wiring diagram / voir schéma de câblage
14		---	00-297808-012	=		**Warmwasser / hot water / eau chaude**
15		---	00-297808-010	=		**Kaltwasser / cold water / eau froide**
16		---	00-774810-001	=		
17		---	00-735171-002	=		
18		---	01-243891-002	=		
19		---	00-168611-009	=		
20		---	01-245560-003	=		
21		---	00-897686-001	=		
22		---	01-245571-002	=		L=2000 mm
23		---	01-291709-001	=		
24		---	00-229110-002	=		
25		---	01-291708-001	=		
26		---	00-897668-001	=		
27		---	00-603076-000	=		
28		---	00-774034-001	=		
29		---	00-774010-001	=		
30		---	01-296094-001	=		

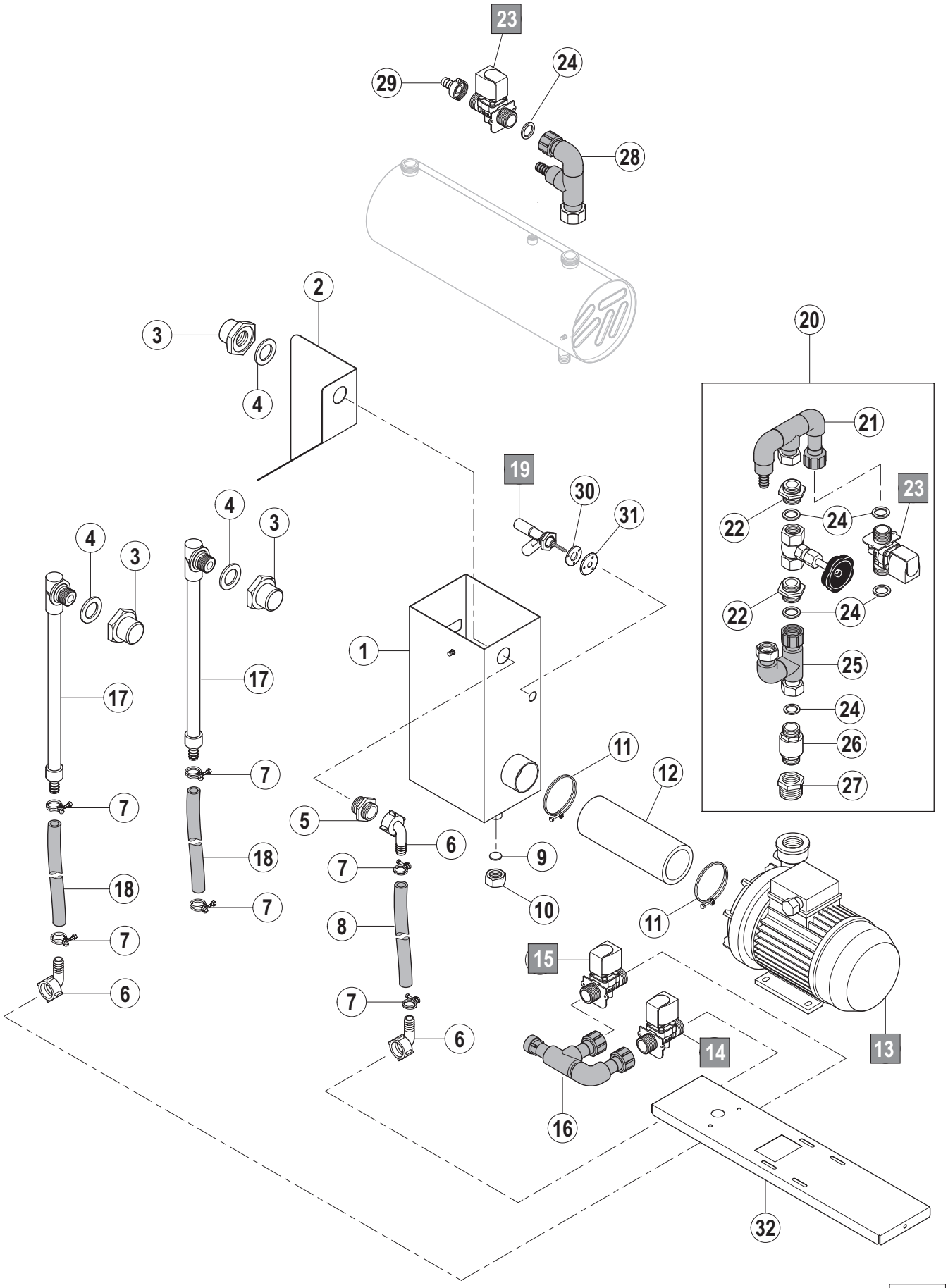
23
24
29
28
2
3
4
20
21
19
30
31
22
24
23
22
24
25
24
26
27
4
3
4
3
1
17
17
7
7
18
18
7
7
6
11
12
5
6
7
9
10
8
11
15
7
6
6
14
13
16
32
CN 13.3

A Laufrichtung / Working direction / Sens de marche

B Maschinen-Grundtyp / Basic machine / Machine de base

X Länge / Length / Longueur

Pos.	A	B			X [mm]	Bemerkung / Remarks / Remarques
		CS	CN	CP		
01		---	01-291436-001	---		
02		---	01-291662-001	---		
03		---	00-774670-001	---		
04		---	00-172986-027	---		
05		---	00-227931-000	---		
06		---	00-299240-001	---		
07		---	00-323945-022	---		
08		---	01-245571-013	---		L=1200 mm
09		---	00-168611-022	---		
10		---	00-600588-000	---		
11		---	00-323945-064	---		
12		---	00-693255-031	---		
13		---	00-897662-…	---		siehe Schaltplan / see wiring diagram / voir schéma de câblage
14		---	00-297808-008	---		**Kaltwasser / cold water / eau froide**
15		---	00-297808-012	---		**Warmwasser / hot water / eau chaude**
16		---	00-775112-002	---		
17		---	00-897686-001	---		
18		---	01-245571-002	---		L=2000 mm
19		---	00-735171-002	---		
20		---	01-291709-002	---		
21		---	01-245694-002	---		
22		---	00-227931-000	---		
23		---	00-297808-001	---		
24		---	00-168611-009	---		
25		---	01-245693-001	---		
26		---	00-897668-001	---		
27		---	00-603076-000	---		
28		---	01-245560-005	---		
29		---	00-302201-001	---		
30		---	00-774034-001	---		
31		---	00-774010-001	---		
32		---	01-296094-001	---		

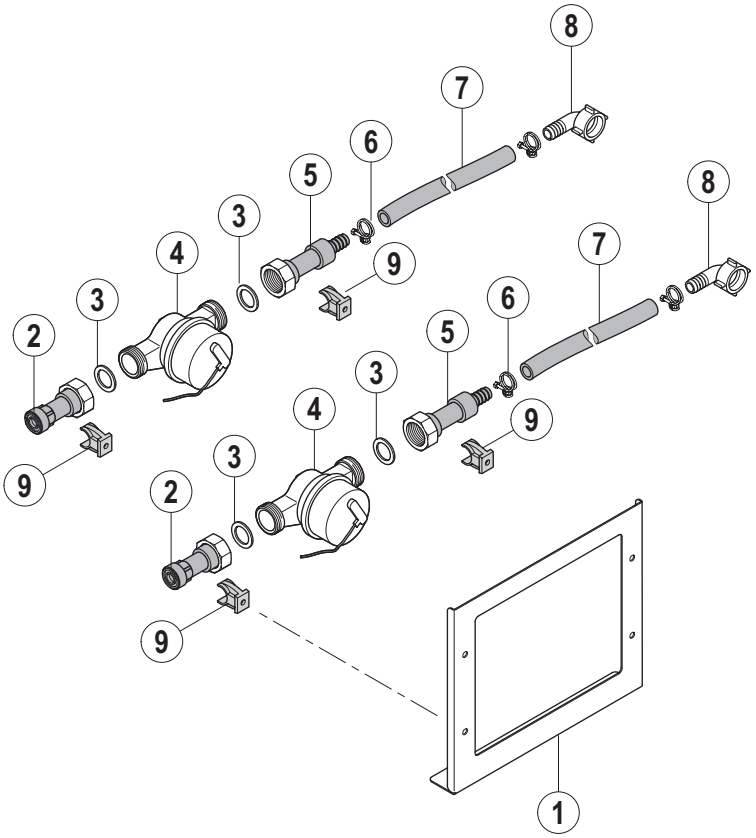
8
7
6
5
3
4
9
3
2
9
8
7
6
5
3
4
9
3
2
9
1

A Laufrichtung / Working direction / Sens de marche

B Maschinen-Grundtyp / Basic machine / Machine de base

X Länge / Length / Longueur

Pos.	A	B			X [mm]	Bemerkung / Remarks / Remarques
		CS	CN	CP		
01		01-291298-001	=	=		
02		01-291004-002	=	=		
03		00-168611-003	=	=		
04		01-244744-002	=	=		
05		01-291004-006	=	=		
06		00-323945-022	=	=		
07		01-245571-014	=	=		L=500 mm
08		00-299240-001	=	=		
09		00-228810-002	=	=		

A Laufrichtung / Working direction / Sens de marche

B Maschinen-Grundtyp / Basic machine / Machine de base

X Länge / Length / Longueur

Pos.	A	B			X [mm]	Bemerkung / Remarks / Remarques
		CS	CN	CP		
0						

CS / CN / CP

Wärmerückgewinnung

Heat recovery

Récupération de la chaleur

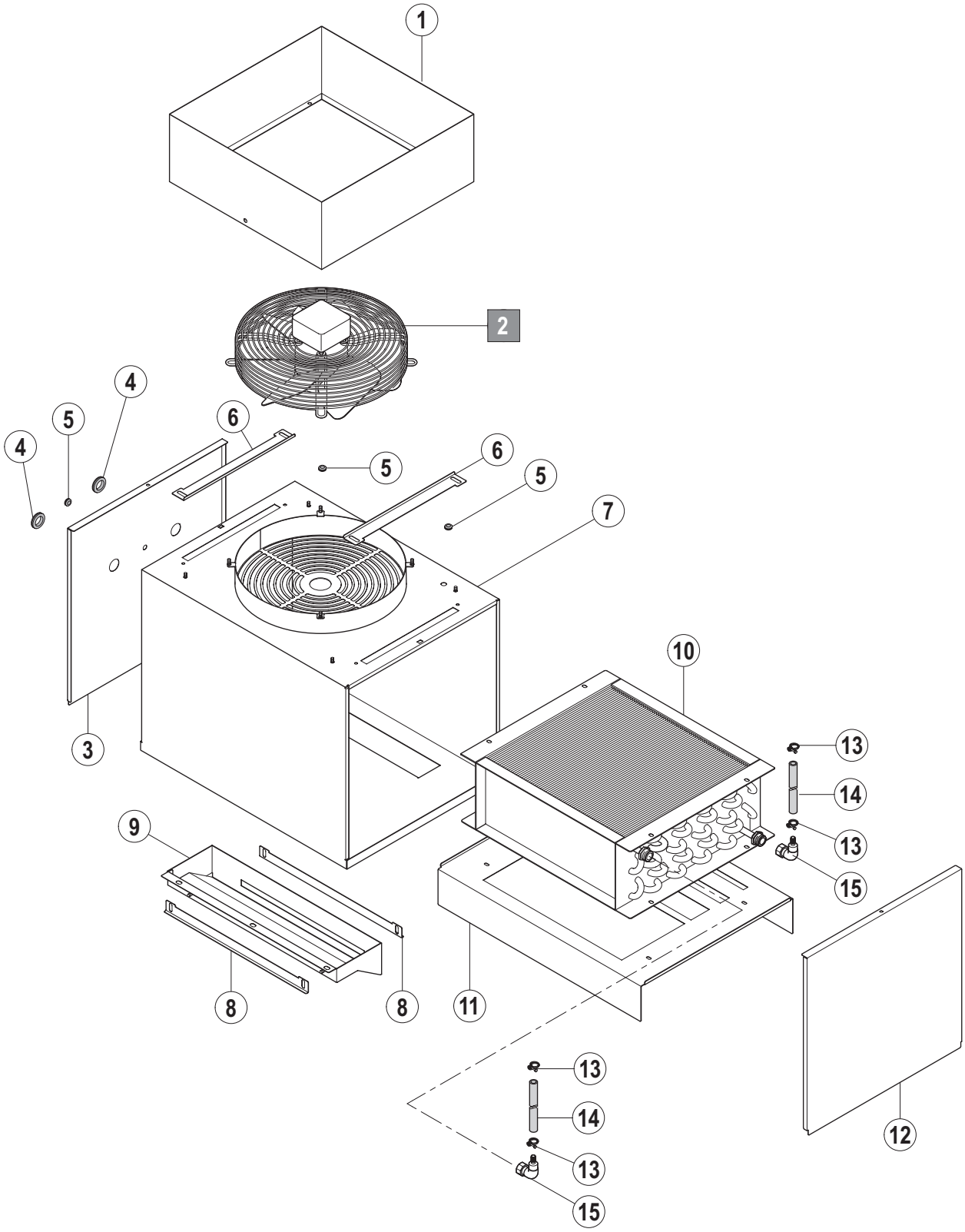

CN 14.1

A Laufrichtung / Working direction / Sens de marche

B Maschinen-Grundtyp / Basic machine / Machine de base

X Länge / Length / Longueur

Pos.	A	B			X [mm]	Bemerkung / Remarks / Remarques
		CS	CN	CP		
01		---	01-245744-002	=		
02		---	00-781492-…	=		siehe Schaltplan / see wiring diagram / voir schéma de câblage
03		---	01-245206-003	=		
04		---	00-227748-004	=		
05		---	00-227748-001	=		
06		---	01-291395-002	=		
07		---	01-291392-001	=		
08		---	01-291395-001	=		
09	L/R	---	01-291394-001	=		
	R/L	---	01-291394-002	=		
10		---	01-245490-007	=		standard
		---	01-245490-008	=		CrNi / SST / inox
11		---	01-245274-004	=		
12		---	01-245206-001	=		
13		---	00-323945-022	=		
14		---	01-245571-002	=		L=2000 mm
15		---	00-299240-001	=		

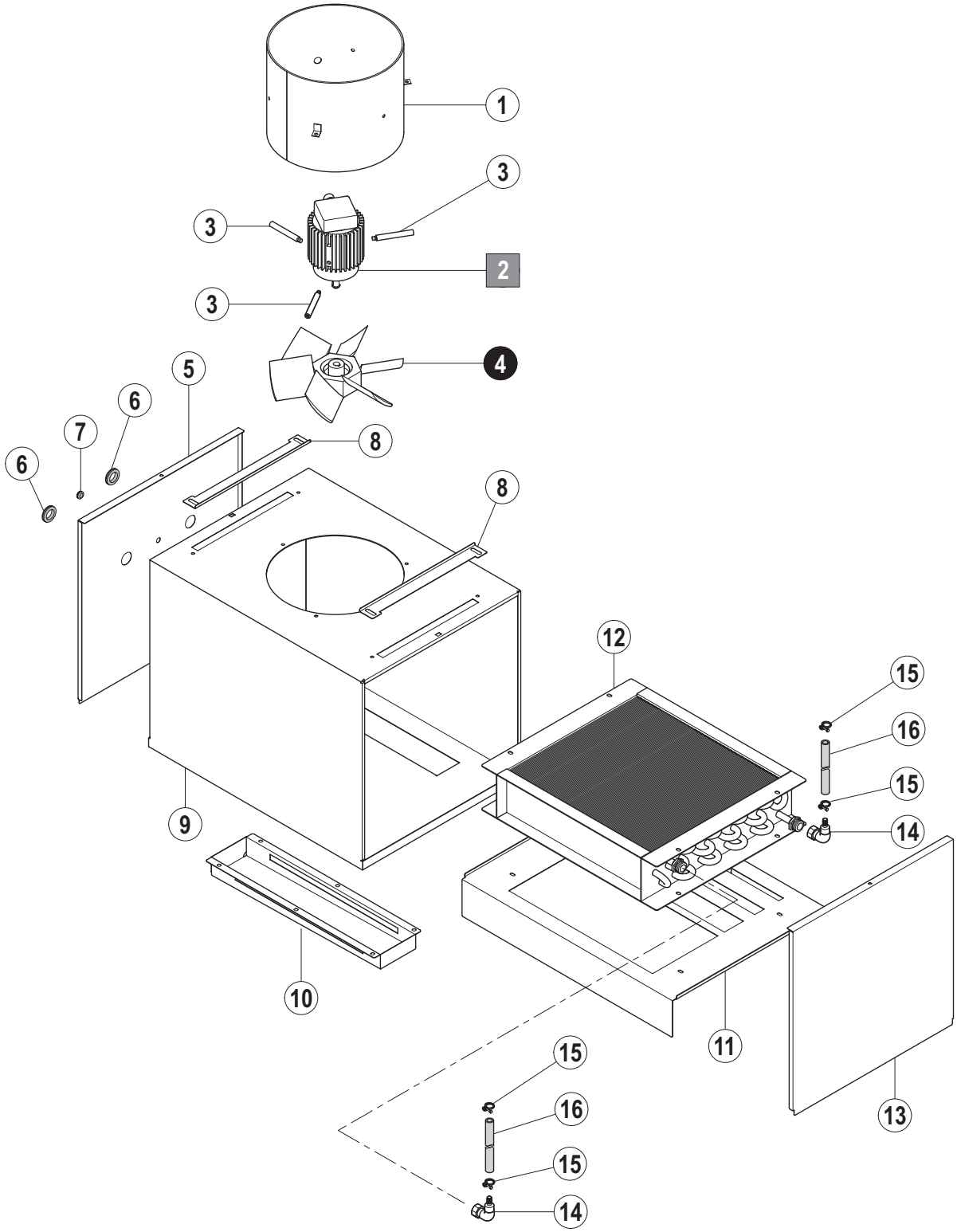

CN 14.2

A Laufrichtung / Working direction / Sens de marche

B Maschinen-Grundtyp / Basic machine / Machine de base

X Länge / Length / Longueur

Pos.	A	B			X [mm]	Bemerkung / Remarks / Remarques
		CS	CN	CP		
01		00-229438-001	---	---		
02		00-145075-…	---	---		siehe Schaltplan / see wiring diagram / voir schéma de câblage
03		00-693877-002	---	---		
04		00-038933-001	---	---		
05		01-245206-003	---	---		
06		00-227748-004	---	---		
07		00-227748-001	---	---		
08		00-228336-000	---	---		
09		01-291392-002	---	---		
10		01-291796-001	---	---		
11		01-245274-004	---	---		
12		01-291833-001	---	---		
13		01-245206-001	---	---		
14		00-299240-001	---	---		
15		00-323945-022	---	---		
16		01-245571-002	---	---		L=2000 mm

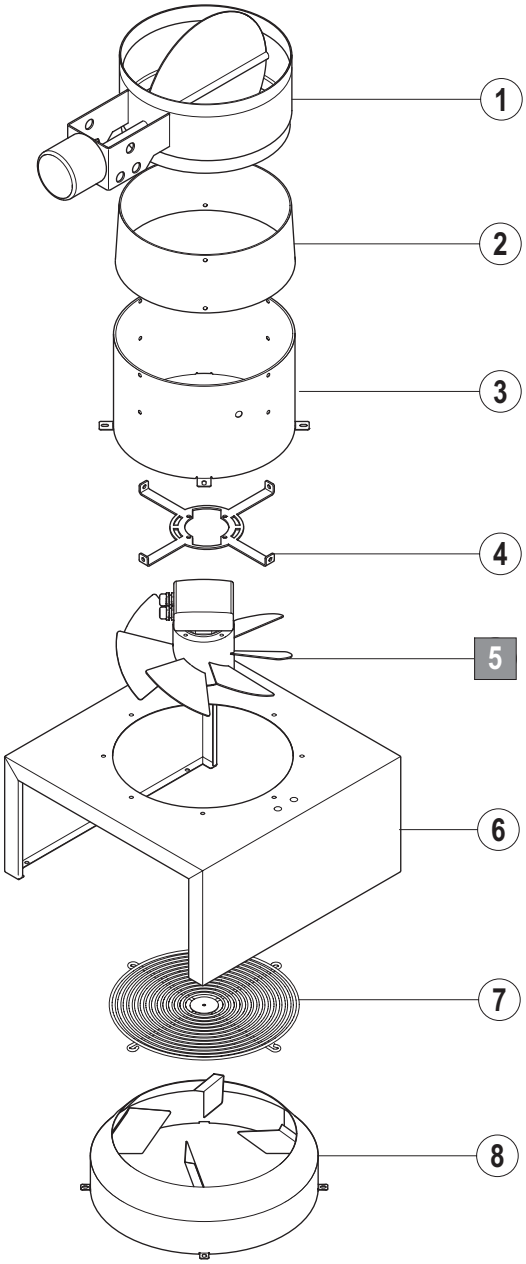
1
2
3
4
5
6
7
8

A Laufrichtung / Working direction / Sens de marche

B Maschinen-Grundtyp / Basic machine / Machine de base

X Länge / Length / Longueur

Pos.	A	B			X [mm]	Bemerkung / Remarks / Remarques
		CS	CN	CP		
01		---	00-296927-…	=		siehe Schaltplan / see wiring diagram / voir schéma de câblage
02		---	01-245752-001	=		
03		---	01-245746-001	=		
04		---	01-245747-001	=		
05		---	00-775078-…	=		siehe Schaltplan / see wiring diagram / voir schéma de câblage
06		---	01-245745-003	=		
07		---	00-896396-001	=		
08		---	00-781353-001	=		

CS / CN / CP

Wärmepumpe

Heat pump

Pompe à chaleur

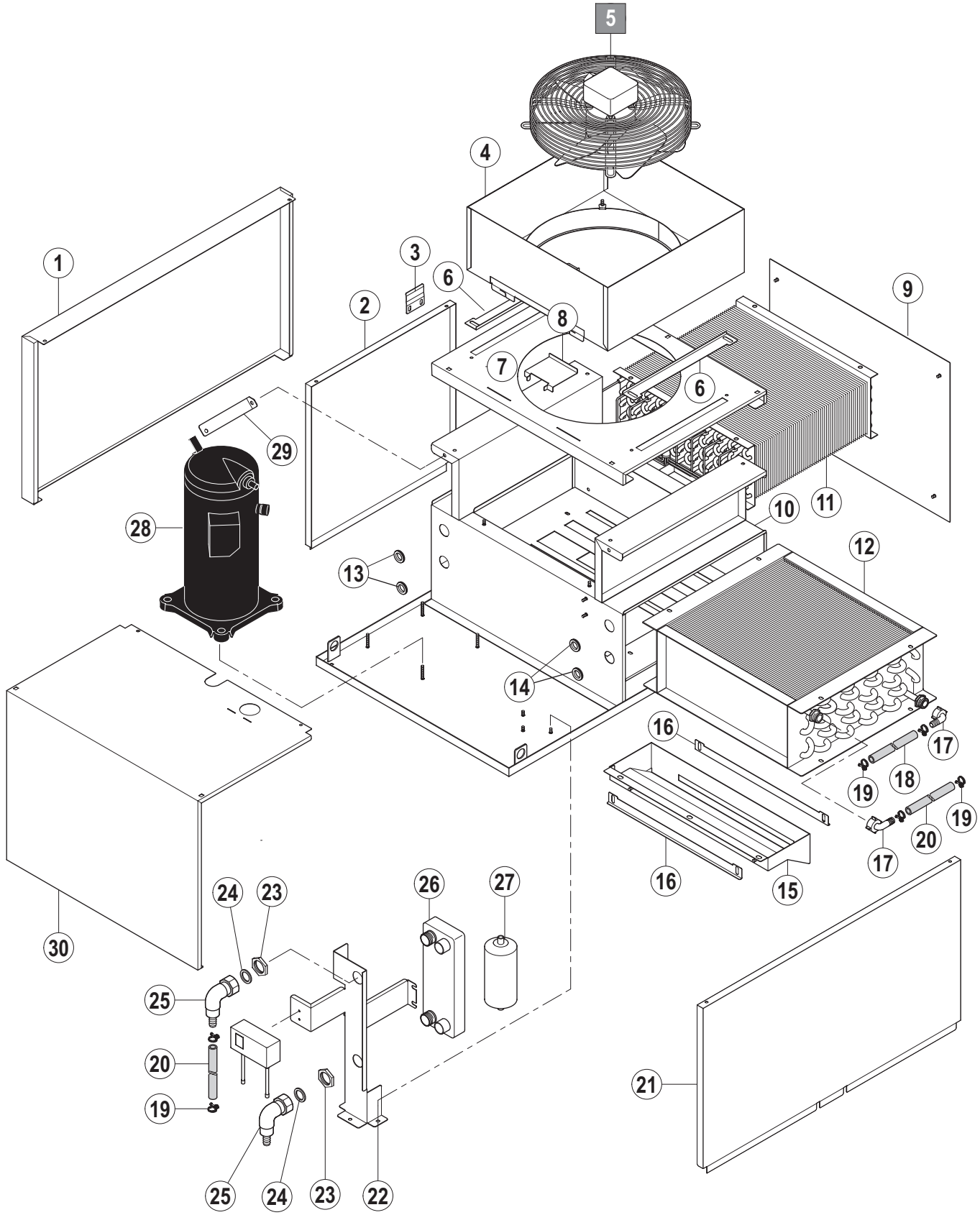
5
4
1
3
6
2
8
9
7
6
29
28
10
11
12
13
14
16
17
18
19
19
20
17
16
15
30
24
23
26
27
25
20
19
21
25
24
23
22

CN 15.1

A Laufrichtung / Working direction / Sens de marche

B Maschinen-Grundtyp / Basic machine / Machine de base

X Länge / Length / Longueur

Pos.	A	B			X [mm]	Bemerkung / Remarks / Remarques
		CS	CN	CP		
01		---	01-291604-001	=		
02		---	01-296226-001	=		
03		---	01-291605-001	=		
04		---	01-291595-001	=		
05		---	00-781492-…	=		siehe Schaltplan / see wiring diagram / voir schéma de câblage
06		---	01-291395-002	=		
07		---	01-291589-001	=		
08		---	01-291837-001	=		
09		---	01-291593-001	=		
10		---	01-291588-001	=		
11		---	00-887639-001	=		
12		---	01-245490-007	=		
13		---	00-785565-004	=		
14		---	00-227748-004	=		
15	L/R	---	01-291394-001	=		
	R/L	---	01-291394-002	=		
16		---	01-291395-001	=		
17		---	00-299240-001	=		
18		---	01-245571-014	=		L=500 mm
19		---	00-323945-022	=		
20		---	01-245571-002	=		L=2000 mm
21		---	01-245548-001	=		
22		---	01-245549-001	=		
23		---	00-172739-008	=		
24		---	00-168611-003	=		
25		---	01-245560-001	=		
26		---	00-323456-001	=		
27		---	00-323443-000	=		
28		---	00-323437-002	=		
29		---	01-245722-001	=		
30		---	01-291591-001	=		

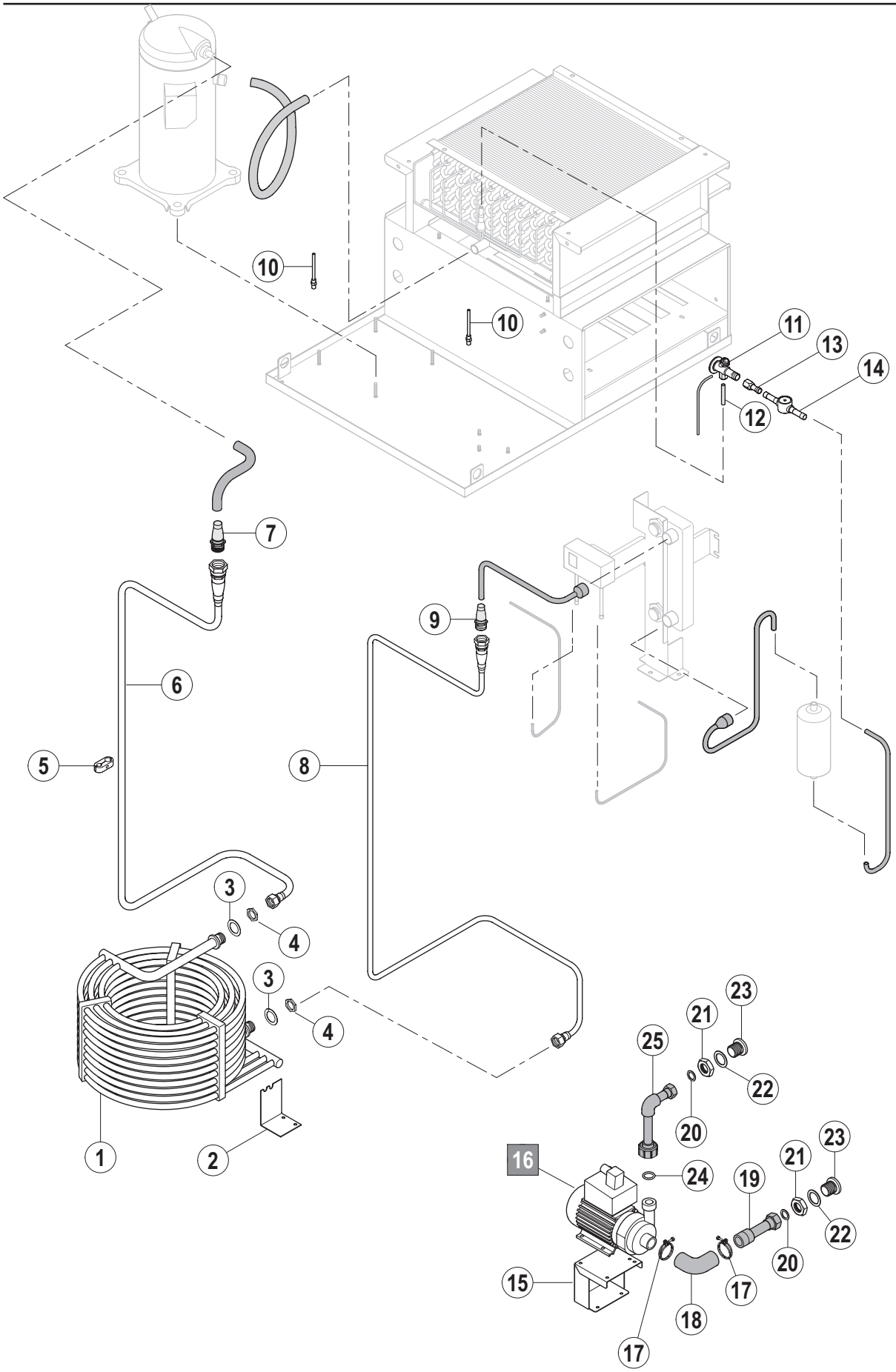
10
10
11
13
14
12
7
9
6
5
8
3
4
3
4
1
2
23
21
25
22
20
16
24
19
21
23
22
20
15
17
18
17

CN 15.2

A Laufrichtung / Working direction / Sens de marche

B Maschinen-Grundtyp / Basic machine / Machine de base

X Länge / Length / Longueur

Pos.	A	B			X [mm]	Bemerkung / Remarks / Remarques
		CS	CN	CP		
01		---	01-291581-001	=		
02		---	01-296021-001	=		
03		---	00-696936-018	=		
04		---	00-172739-013	=		
05		---	00-897282-001	=		
06	L/R	---	01-291606-001	=		
	R/L	---	01-291598-002	=		
07		---	00-896909-001	=		
08	L/R	---	01-291599-001	=		
	R/L	---	01-291607-001	=		
09		---	00-775080-001	=		
10		---	00-323447-000	=		
11		---	00-775082-001	=		
12		---	00-323439-004	=		
13		---	00-324439-002	=		
14		---	00-323444-000	=		
15		---	01-296093-002	=		
16		---	00-781237-…	=		siehe Schaltplan / see wiring diagram / voir schéma de câblage
17		---	00-323945-043	=		
18		---	00-781336-004	=		
19		---	01-291664-001	=		
20		---	00-168611-009	=		
21		---	00-603061-000	=		
22		---	00-300084-007	=		
23		---	00-774953-001	=		
24		---	00-067500-072	=		
25	L/R	---	01-291665-001	=		
	R/L	---	01-291665-002	=		

CS / CN / CP

Transportsystem

Transport system

Système de convoyage

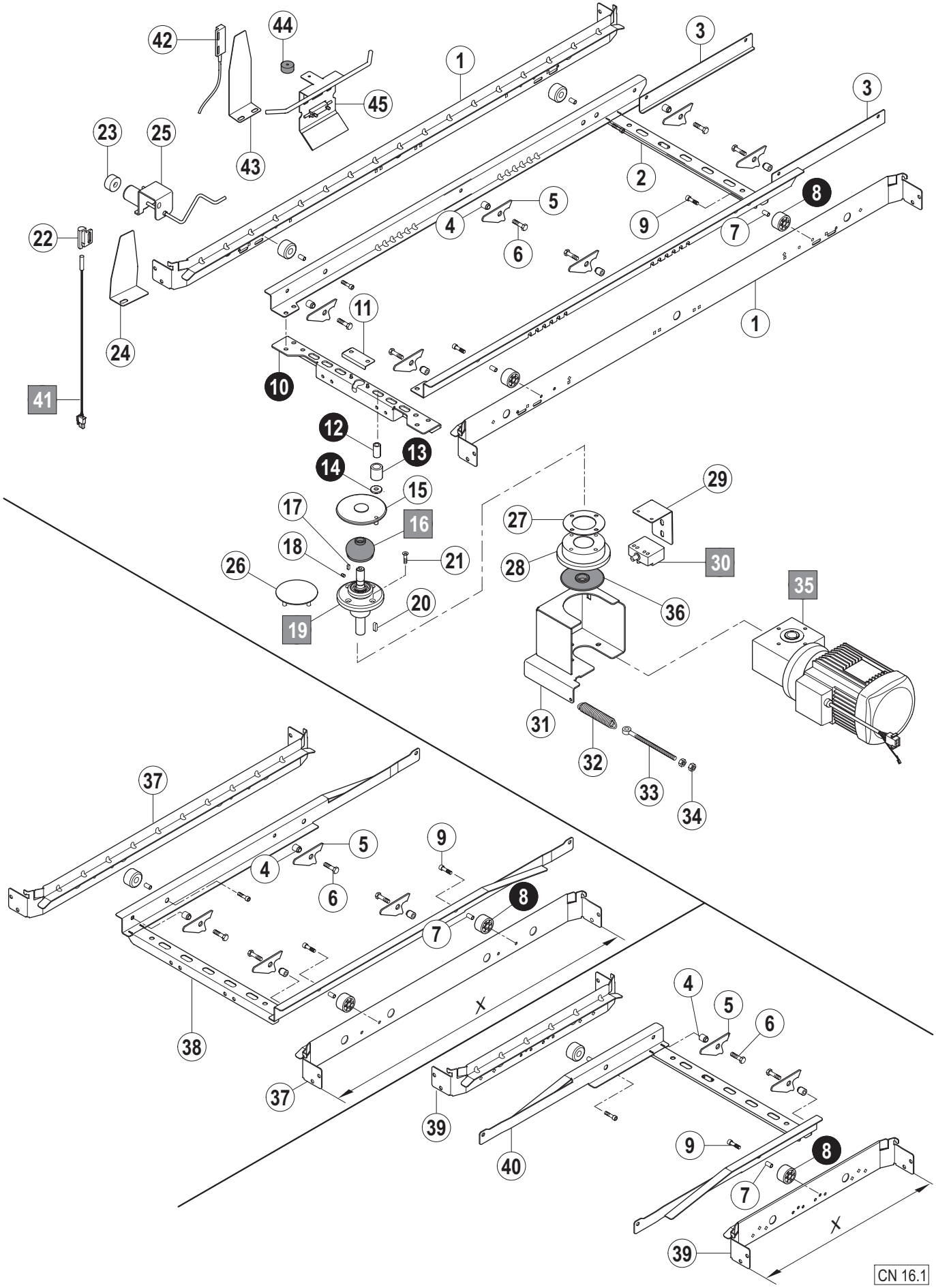
42
44
1
3
45
3
23
25
43
2
8
5
22
4
9
7
6
11
1
24
10
41
12
13
14
15
29
17
16
27
18
21
28
30
26
36
35
20
19
31
32
33
34
37
5
9
4
6
8
7
38
X
4
5
6
37
39
40
9
8
7
X
39
CN 16.1

A Laufrichtung / Working direction / Sens de marche

B Maschinen-Grundtyp / Basic machine / Machine de base

X Länge / Length / Longueur

Pos.	A	B			X [mm]	Bemerkung / Remarks / Remarques
		CS	CN	CP		
01		01-291368-001	=	=		
02		01-291375-001	=	=		
03		---	01-291881-001	=		SN-Modul
04		01-243284-000	=	=		
05		01-291371-001	=	=		
06		00-602579-000	=	=		
07		01-291535-001	=	=		
08		01-291534-001	=	=		
09		00-603026-000	=	=		
10		01-291772-001	=	=		
11		00-868312-001	=	=		
12		00-154795-000	=	=		
13		00-154789-000	=	=		
14		00-781490-001	=	=		
15		00-781117-001	=	=		
16		00-154791-000	=	=		
17		00-600681-000	=	=		
18		00-600682-000	=	=		
19		00-781064-004	=	=		
20		00-600683-000	=	=		
21		00-609794-000	=	=		
22		---	01-240288-001	=		
23		---	00-774714-001	=		
24		---	01-291513-001	=		
	L/R	---	01-291774-001	=		E-Modul
	R/L	---	01-291774-002	=		E-Modul
25	L/R	---	01-242189-001	=		
	R/L	---	01-242189-002	=		
26		---	00-899210-001	=		SN-Modul
27		00-781007-001	=	=		
28		01-291529-001	=	=		
29		01-291387-001	=	=		
30		00-785286-001	=	=		
31	L/R	01-291888-001	=	=		
	R/L	01-291888-002	=	=		
32		00-774828-002	=	=		
33		00-602920-000	=	=		
34		00-603488-000	=	=		
35		01-291291-…	=	=		siehe Schaltplan / see wiring diagram / voir schéma de câblage
36		01-241802-001	=	=		
37		01-291368-004	=	=	500	E-Modul
		---	01-291368-003	=	650	L-Modul
		---	01-291368-002	=	900	S-Modul
38		01-291375-004	=	=	500	E-Modul
		---	01-291375-003	=	650	L-Modul
		---	01-291375-002	=	900	S-Modul
39		---	01-291368-005	=	850	CDS /DS
		---	01-291368-006	=	450	ND
		01-291368-003	---	---	650	D- Trocknung / D- dryer / D- séchage
		---	01-291368-009	=	650	Spülmodul / rinse module / module de rinçage

Pos.	A	B			X [mm]	Bemerkung / Remarks / Remarques
		CS	CN	CP		
40		---	01-291375-005	=	850	CDS /DS
		---	01-291375-006	=	450	ND
		01-291375-003	=	=	650	D- Trocknung / D- dryer / D- séchage
		---	01-291375-008	=	650	Spülmodul / rinse module / module de rinçage
41		---	00-883838-001	=		
42		00-229517-000	---	---		
43		01-291804-001	---	---		
44		00-774714-001	---	---		
45		01-291802-001	---	---		

CS / CN / CP

Türen und Verkleidungen

Doors and panels

Portes et panneaux

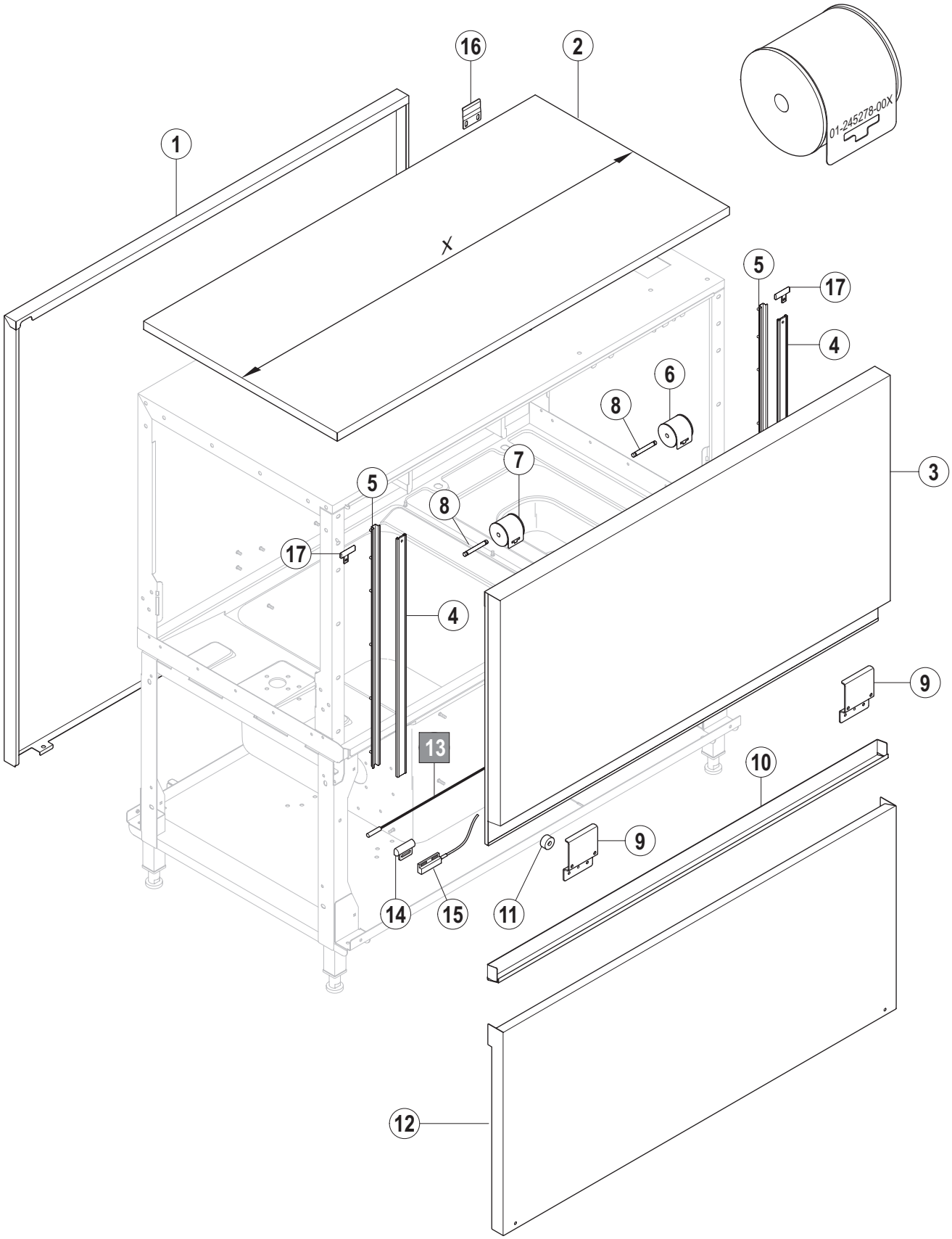

CN 17.1

A Laufrichtung / Working direction / Sens de marche

B Maschinen-Grundtyp / Basic machine / Machine de base

X Länge / Length / Longueur

Pos.	A	B			X [mm]	Bemerkung / Remarks / Remarques
		CS	CN	CP		
01		01-291317-005	01-291317-001	---	1350	ohne Isolierung / without insulation / sans isolation
		---	01-291317-002	---	900	ohne Isolierung / without insulation / sans isolation
		---	01-291317-003	---	650	ohne Isolierung / without insulation / sans isolation
		01-291317-006	01-291317-004	---	500	ohne Isolierung / without insulation / sans isolation
		---	01-291317-008	=	300	ohne Isolierung / without insulation / sans isolation
		---	01-291711-001	=	1350	mit Isolierung / with insulation / avec isolation
		---	01-291711-002	=	900	mit Isolierung / with insulation / avec isolation
		---	01-291711-003	=	650	mit Isolierung / with insulation / avec isolation
		---	01-291711-004	=	500	mit Isolierung / with insulation / avec isolation
02		01-291397-006	01-291397-001	---	850	ohne Isolierung / without insulation / sans isolation
		01-291397-002	=	---	900	ohne Isolierung / without insulation / sans isolation
		---	01-291397-003	---	650	ohne Isolierung / without insulation / sans isolation
		01-291397-004	=	---	500	ohne Isolierung / without insulation / sans isolation
		---	01-291397-005	---	450	ohne Isolierung / without insulation / sans isolation
		01-291397-006	=	---	1350	ohne Isolierung / without insulation / sans isolation
		---	01-291397-007	---	300	ohne Isolierung / without insulation / sans isolation
		---	01-291398-001	=	850	mit Isolierung / with insulation / avec isolation
		---	01-291398-002	=	900	mit Isolierung / with insulation / avec isolation
		---	01-291398-003	=	650	mit Isolierung / with insulation / avec isolation
		---	01-291398-004	=	500	mit Isolierung / with insulation / avec isolation
		---	01-291398-005	=	450	mit Isolierung / with insulation / avec isolation
		---	01-291398-006	=	1350	mit Isolierung / with insulation / avec isolation
		---	01-291398-007	=	300	mit Isolierung / with insulation / avec isolation
03		01291320-005	---	---	1350	ohne Isolierung / without insulation / sans isolation
		01291321-001	=	=	1350	mit Isolierung / with insulation / avec isolation
		---	01291321-002	=	900	mit Isolierung / with insulation / avec isolation
		---	01291321-003	=	650	mit Isolierung / with insulation / avec isolation
		---	01291321-004	=	500	mit Isolierung / with insulation / avec isolation
04		00-325064-008	=	=		
05		01-245126-003	=	=		
06		01-245278-004	---	---	1350	Tür ohne Isolierung / door without insulation / porte sans isolation
		01-245278-007	=	=	1350	Tür mit Isolierung / door with insulation / porte avec isolation
		---	01-245278-005	=	900	Tür mit Isolierung / door with insulation / porte avec isolation
		---	01-245278-003	=	650	Tür mit Isolierung / door with insulation / porte avec isolation
		---	01-245278-002	=	500	Tür mit Isolierung / door with insulation / porte avec isolation
07		01-245278-003	=	=	1350	Tür ohne Isolierung / door without insulation / porte sans isolation
		01-245278-006	=	=	1350	Tür mit Isolierung / door with insulation / porte avec isolation
		---	01-245278-005	=	900	Tür mit Isolierung / door with insulation / porte avec isolation
		---	01-245278-003	=	650	Tür mit Isolierung / door with insulation / porte avec isolation
		---	01-245278-002	=	500	Tür mit Isolierung / door with insulation / porte avec isolation
08		01-245281-001	=	=		
09		01-245127-001	=	=	1350	
		---	01-245127-001	=	900	
		---	01-245127-003	=	650	
		---	01-245279-001	=	500	
10		01-245129-005	=	=	1350	
		---	01-245129-002		900	
		---	01-245129-006		650	
		---	01-245129-004		500	
11		00-774714-001	=	=		

A Laufrichtung / Working direction / Sens de marche

B Maschinen-Grundtyp / Basic machine / Machine de base

X Länge / Length / Longueur

Pos.	A	B			X [mm]	Bemerkung / Remarks / Remarques
		CS	CN	CP		
12	L/R	01-291787-001	---	---	1350	
	R/L	01-291787-002	---	---	1350	
		---	01-291787-004	----	1350	ohne Vorwaschung / without prewash / sans prélavage
	L/R	---	01-291787-005	01-291407-010	1350	mit Vorwaschung / with prewash / avec prélavage
	R/L	---	01-291787-006	01-291407-010	1350	mit Vorwaschung / with prewash / avec prélavage
	L/R	---	01-291407-004	=	900	**S- Modul**
	R/L	---	01-291407-005	=	900	**S- Modul**
		---	01-291407-011	=	900	**A- Modul**
	L/R	---	01-291407-006		650	**L-Modul**
	R/L	---	01-291407-007		650	**L-Modul**
		---	01-291407-008		650	**Spülmodul / rinse module / module de rinçage**
		---	01-291407-009		500	
13		---	01-240288-001	---		
14		---	00-883838-001	---		
15		00-229517-000	---	---		
16		01-291605-001	=	=		
17		01-291426-001	=	=		

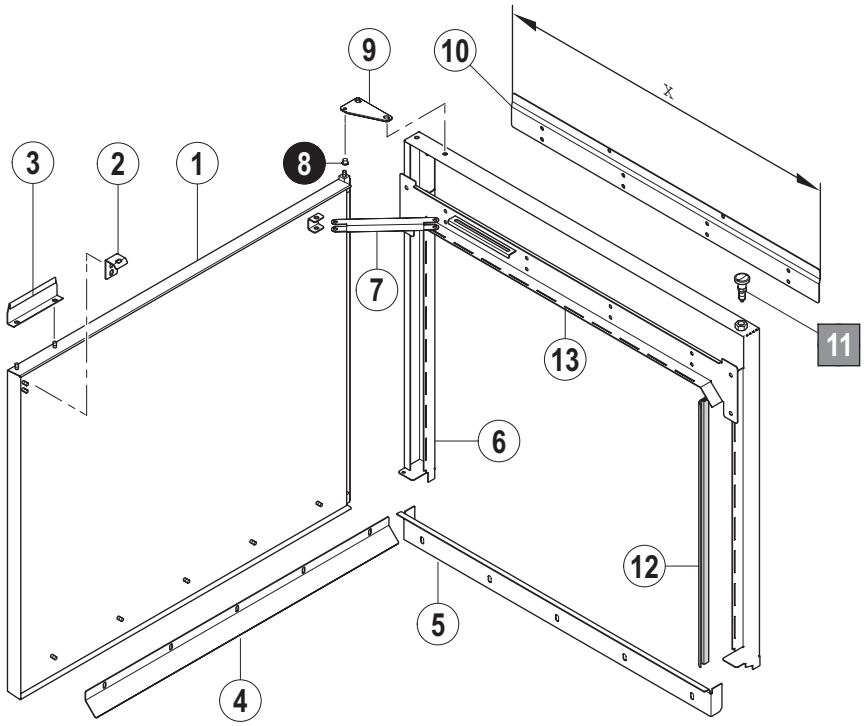
9
10
X
3
2
1
8
7
13
11
6
12
5
4

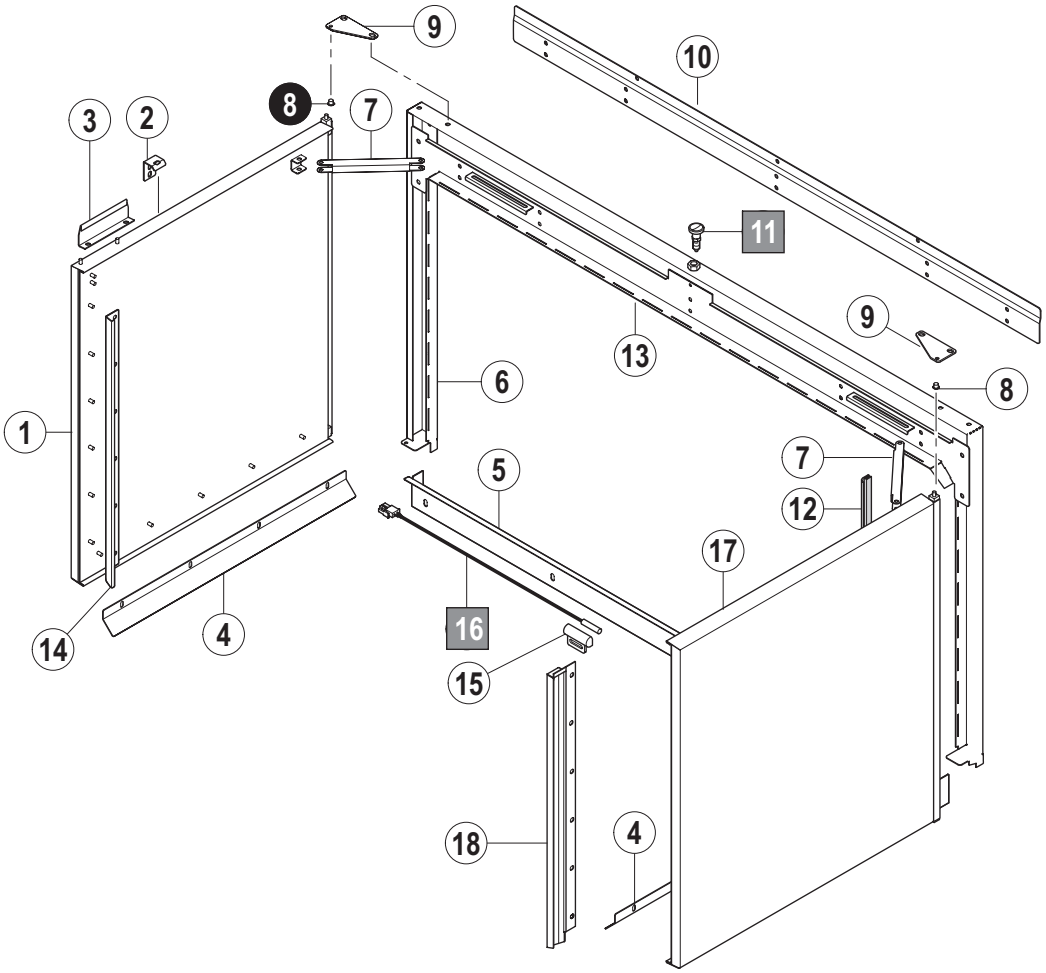
9
10
3
2
8
7
11
9
13
6
8
1
7
5
12
17
14
4
16
15
18
4

A Laufrichtung / Working direction / Sens de marche

B Maschinen-Grundtyp / Basic machine / Machine de base

X Länge / Length / Longueur

Pos.	A	B			X [mm]	Bemerkung / Remarks / Remarques
		CS	CN	CP		
01		01-245985-011	=	=	500	
		01-245985-012	=	=	650	
		01-245985-013	=	=	900	
		01-245985-014	=	=	1350	
02		01-247015-002	=	=		
03		00-896817-002	=	=		
04		01-243888-001	=	=	500	
		01-243888-002	=	=	650	
		01-243888-004	=	=	900	
		01-243888-014	=	=	1350	
05		01-245988-003	=	=	500	
		01-245988-002	=	=	650	
		01-245988-001	=	=	900	
		01-245988-006	=	=	1350	
06		01-291979-003	=	=	500	
		01-291979-002	=	=	650	
		01-291979-001	=	=	900	
		01-291979-004	=	=	1350	
07		01-245990-001	=	=		
08		00-298963-014	=	=		
09		00-784243-001	=	=		
10		01-291062-003	=	=	500	
		01-291062-002	=	=	650	
		01-291062-001	=	=	900	
		01-291062-006	=	=	1350	
11		01-247013-001	=	=		
12		01-243873-015	=	=		L=1700 mm
		01-243873-017	=	=		L=2100 mm
		01-243873-021	=	=		L=2600 mm
13		01-245987-003	=	=	500	
		01-245987-002	=	=	650	
		01-245987-001	=	=	900	
		01-245987-006	=	=	1350	
14		01-245996-004	=	=		
15		---	01-240288-001	=		
16		---	00-883838-001	=		
17		01-245985-015	=	=		
18		01-291111-004	=	=		

CS / CN / CP

Trocknung – gerade

Dryer – straight

Séchage – droit

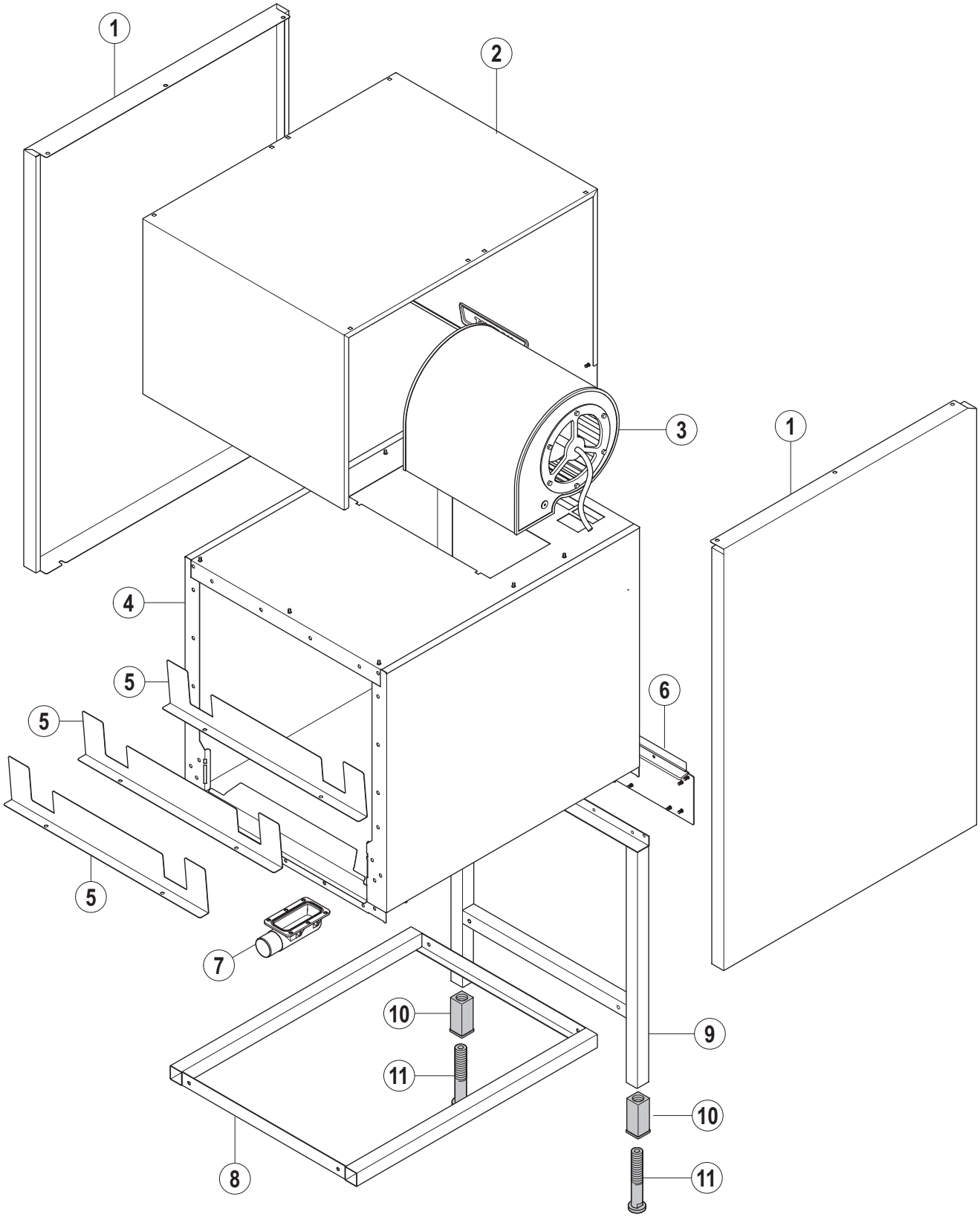

CN 18.1

A Laufrichtung / Working direction / Sens de marche

B Maschinen-Grundtyp / Basic machine / Machine de base

X Länge / Length / Longueur

Pos.	A	B			X [mm]	Bemerkung / Remarks / Remarques
		CS	CN	CP		
01		01-291462-002	01-291462-001	---		ohne Isolierung / without insulation / sans isolation
		01-291828-002	01-291828-001	---		mit Isolierung / with insulation / avec isolation
02		01-291453-002	01-291453-001	---		
03		00-897700-…	=	---		siehe Schaltplan / see wiring diagram / voir schéma de câblage
04		01-291451-004	01-291451-001	---		
05		01-291713-001	=	---		
06		01-291429-002	=	---		
07		00-325529-001	=	---		
08		00-378747-377	00-378747-186	---		
09		00-734997-001	=	---		
10		00-325008-001	=	---		
11		00-325007-001	=	---		

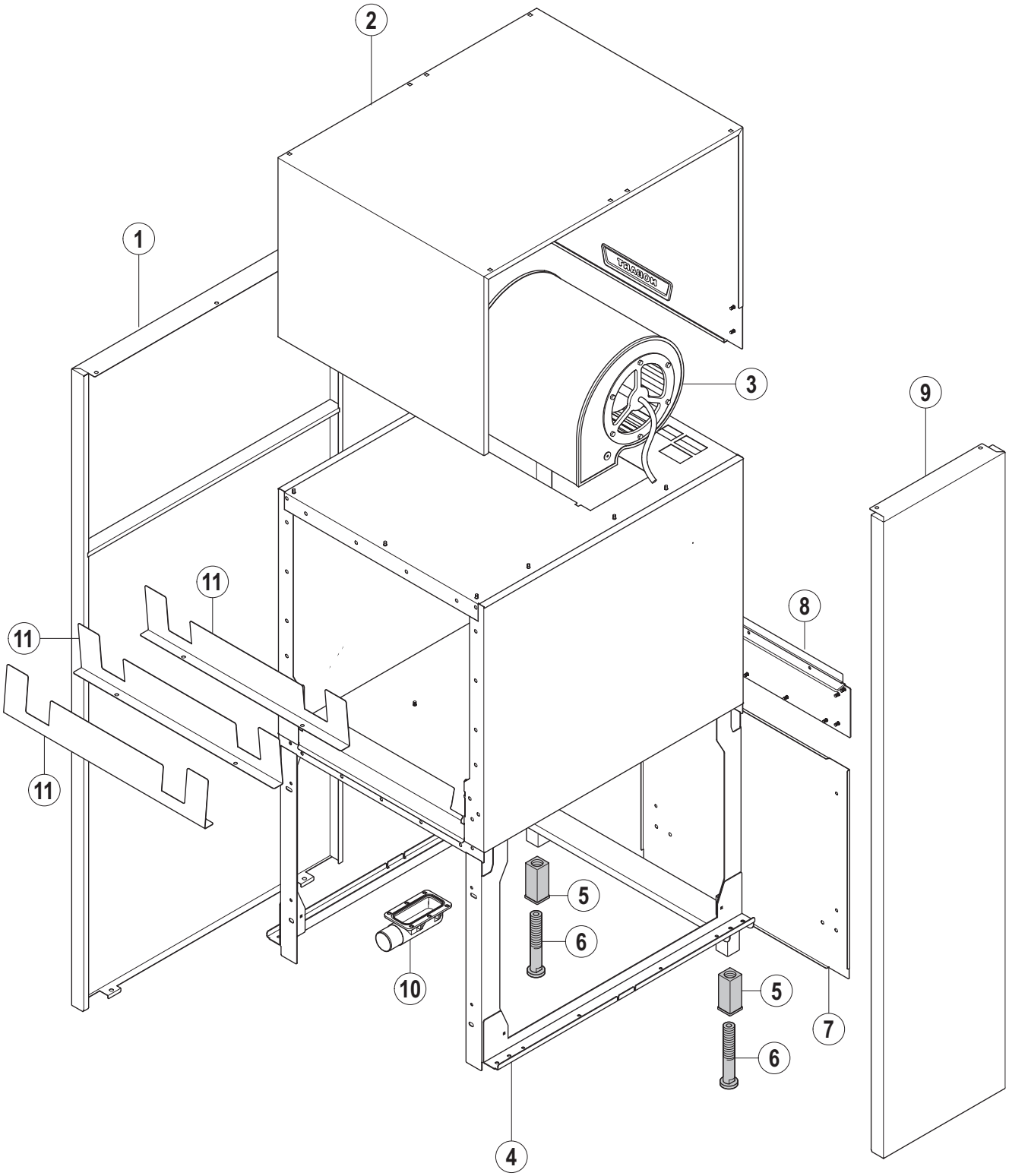
2
1
3
9
11
11
8
11
5
6
10
5
7
6
4

A Laufrichtung / Working direction / Sens de marche

B Maschinen-Grundtyp / Basic machine / Machine de base

X Länge / Length / Longueur

Pos.	A	B			X [mm]	Bemerkung / Remarks / Remarques
		CS	CN	CP		
01		---	01-291467-001	=		ohne Isolierung / without insulation / sans isolation
		---	01-291829-001	=		mit Isolierung / with insulation / avec isolation
02		---	01-291453-001	=		
03		---	00-897700-…	=		siehe Schaltplan / see wiring diagram / voir schéma de câblage
04		---	01-291518-001	=		
05		---	00-325008-001	=		
06		---	00-325007-001	=		
07		---	01-291419-003	=		
08		---	01-291429-002	=		
09		---	01-291467-002	=		ohne Isolierung / without insulation / sans isolation
		---	01-291829-002	=		mit Isolierung / with insulation / avec isolation
10		---	00-325529-001	=		
11		---	01-291713-001	=		

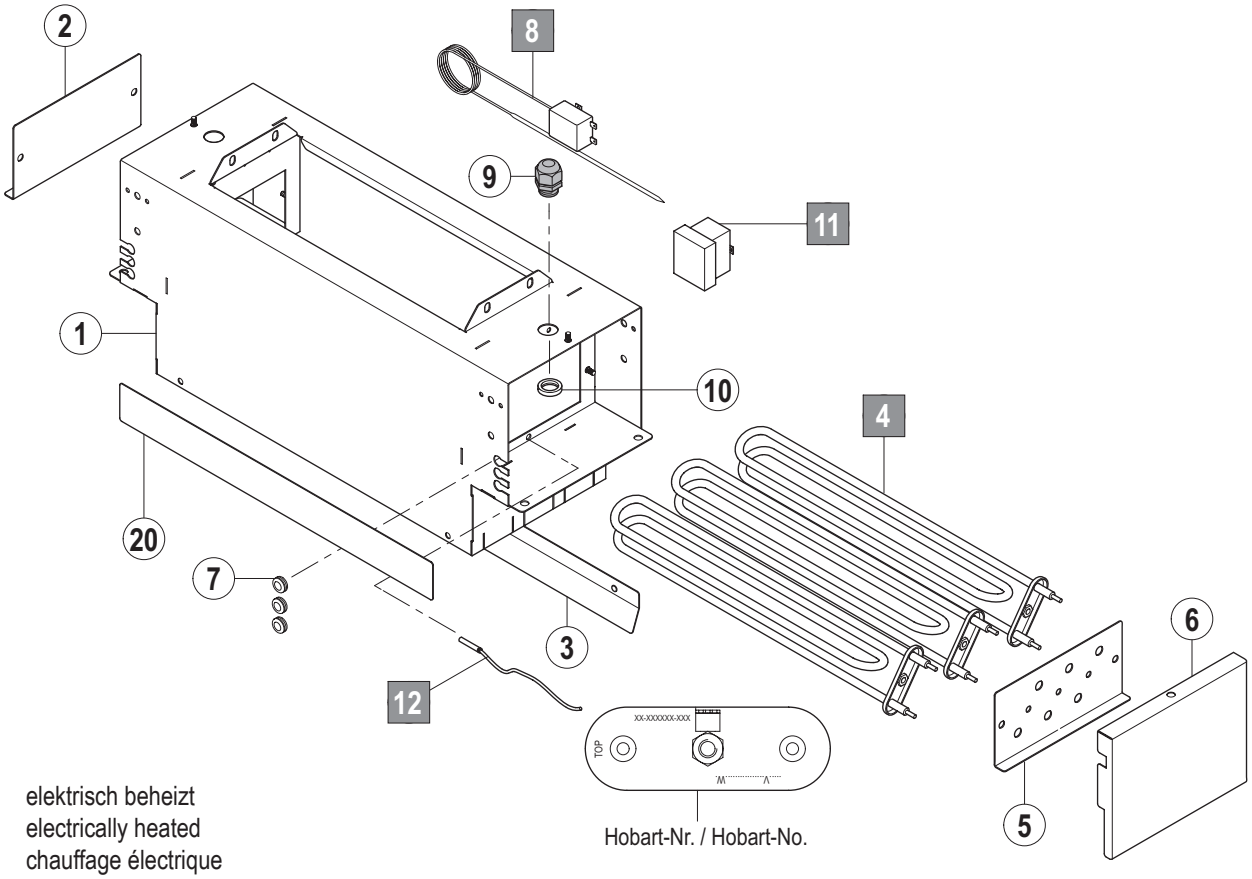

elektrisch beheizt
electrically heated
chauffage électrique

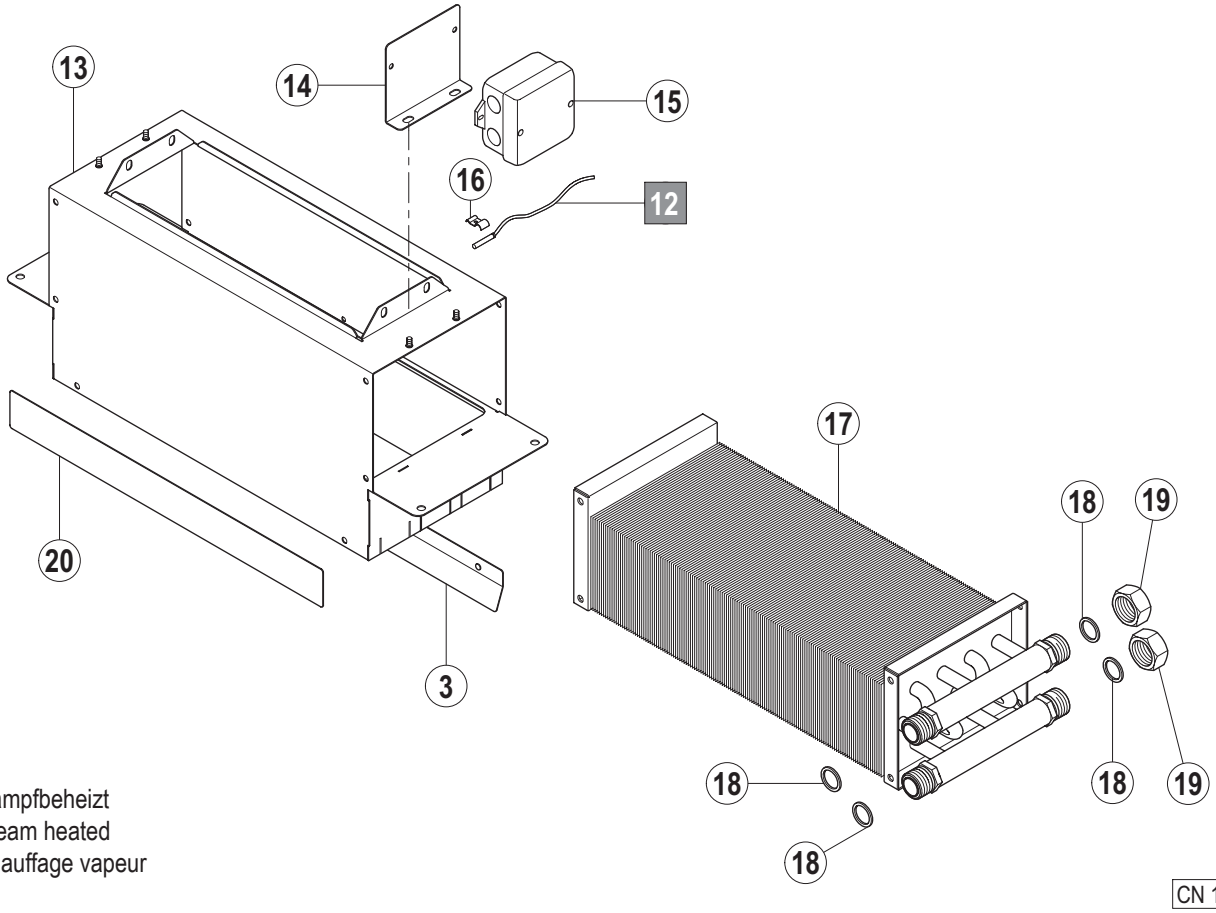

dampfbeheizt
steam heated
chauffage vapeur

CN 18.3

A Laufrichtung / Working direction / Sens de marche

B Maschinen-Grundtyp / Basic machine / Machine de base

X Länge / Length / Longueur

Pos.	A	B			X [mm]	Bemerkung / Remarks / Remarques
		CS	CN	CP		
01		01-291465-001	=	=		
02		01-245214-004	=	=		
03		01-245557-005	=	=		
04		00-229189-…	=	=		Nr. siehe Flansch / no. see flange / no. voir bride
05		01-245554-002	=	=		
06		01-291463-001	=	=		
07		00-227748-001	=	=		
08		00-226505-001	---	---		
09		00-695661-003	=	=		
10		00-695665-003	=	=		
11		00-378791-000	=	=		
12		---	00-775612-001	=		
13		---	01-291894-001	=		
14		---	01-291974-001	=		
15		---	00-232633-000	=		
16		---	00-324157-000	=		
17		---	01-291895-001	=		
18		---	00-302574-014	=		
19		---	01-245605-001	=		
20		---	01-296197-001	=		nur CDC / only CDC / seulement CDC

CS / CN / CP

Transportkurven

Transport curves

Convoyage d’angle

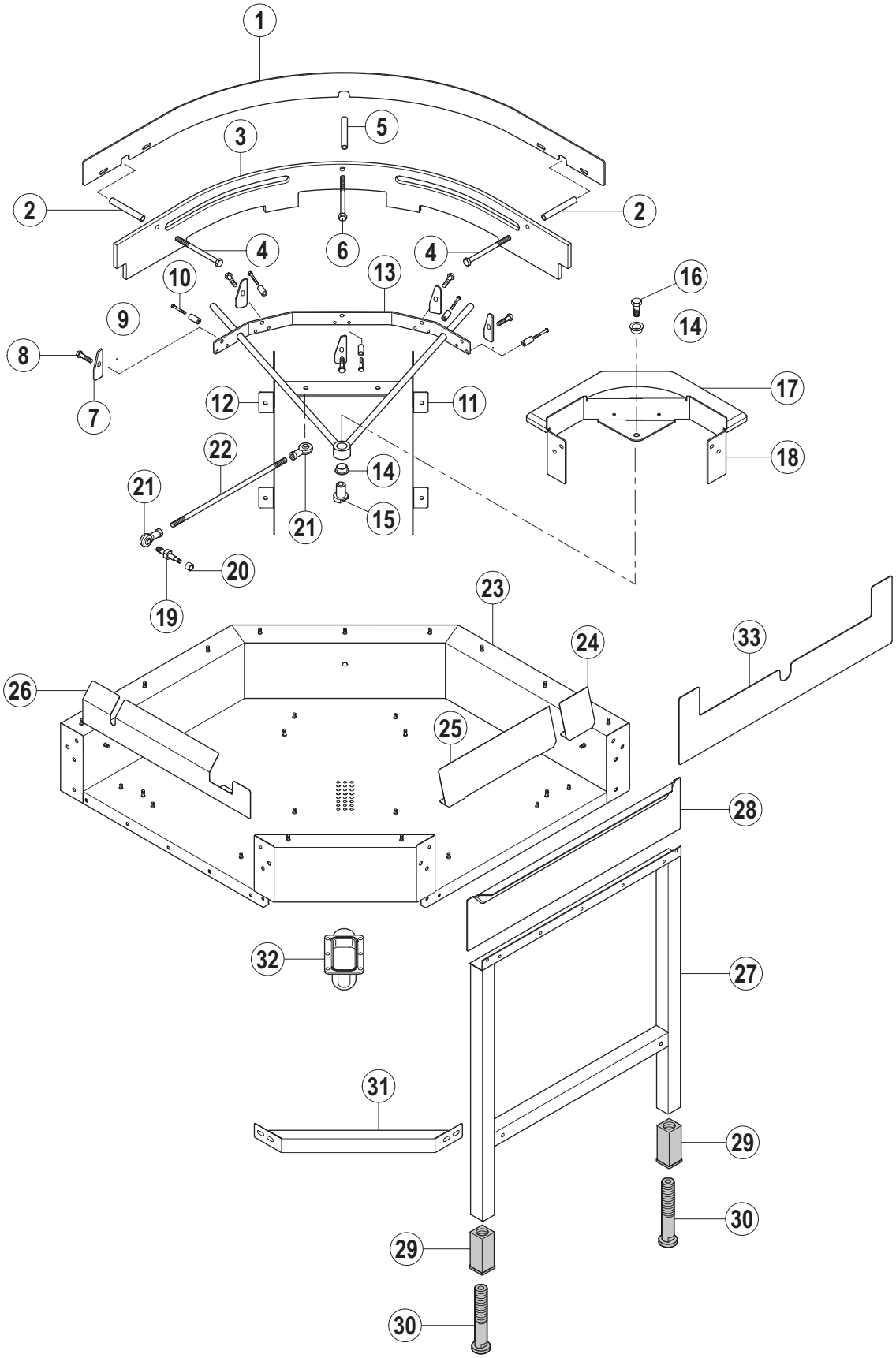
1
2
2
3
4
4
5
6
7
8
9
10
11
12
13
14
14
15
16
17
18
19
20
21
21
21
22
23
24
25
26
27
28
29
29
30
30
31
32
33

A Laufrichtung / Working direction / Sens de marche

B Maschinen-Grundtyp / Basic machine / Machine de base

X Länge / Length / Longueur

Pos.	A	B			X [mm]	Bemerkung / Remarks / Remarques
		CS	CN	CP		
01		00-896433-001	=	=		
02		00-866524-003	=	=		
03		00-896431-001	=	=		
04		00-603124-000	=	=		
05		00-866524-002	=	=		
06		00-604059-000	=	=		
07		00-897777-001	=	=		
08		00-609313-000	=	=		
09		00-380528-037	=	=		
10		00-602643-000	=	=		
11		00-897727-001	=	=		
12		00-897727-002	=	=		
13		00-896440-001	=	=		
14		00-298963-012	=	=		
15		00-734988-001	=	=		
16		00-602594-000	=	=		
17		00-897769-001	=	=		
18		01-291724-001	=	=		
19		00-884105-001	=	=		
20		01-243284-002	=	=		
21		00-609067-000	=	=		
22		00-884128-009	=	=		L=360 mm
		00-884128-010	=	=		L=480 mm
23		01-291719-001	=	=		ohne Trocknung / without dryer / sans séchage
		01-291719-002	=	=		mit Trocknung / with dryer / avec séchage
24		00-897738-002	=	=		
25		00-897738-001	=	=		
26	L/R	01-242184-001	=	=		
	R/L	01-242184-002	=	=		
27		00-734997-001	=	=		
28		01-291429-002	=	=		
29		00-325008-001	=	=		
30		00-325007-001	=	=		
31		00-899284-001	=	=		
32		00-325529-001	=	=		
33		01-291759-001	=	=		

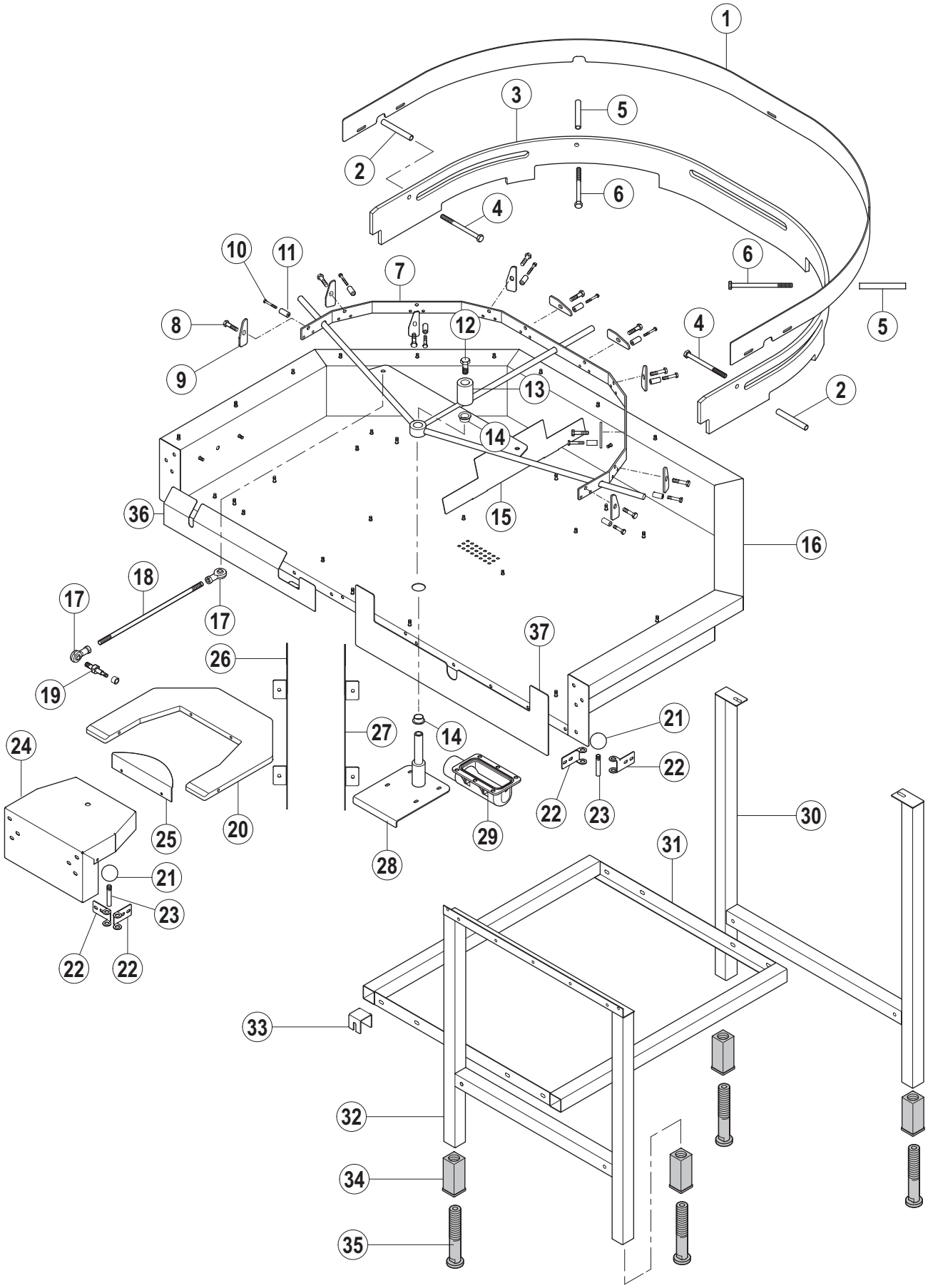
1
2
3
4
5
6
7
8
9
10
11
12
13
14
15
16
17
18
19
20
21
22
23
24
25
26
27
28
29
30
31
32
33
34
35
36
37

CN 19.2

A Laufrichtung / Working direction / Sens de marche

B Maschinen-Grundtyp / Basic machine / Machine de base

X Länge / Length / Longueur

Pos.	A	B			X [mm]	Bemerkung / Remarks / Remarques
		CS	CN	CP		
01		01-245225-001	=	=		
02		00-866524-003	=	=		
03		01-243213-001	=	=		
04		00-603124-000	=	=		
05		00-866524-002	=	=		
06		00-604-059-000	=	=		
07		01-243216-001	=	=		
08		00-609313-000	=	=		
09		00-897777-001	=	=		
10		00-602573-000	=	=		
11		00-380528-037	=	=		
12		00-602594-000	=	=		
13		01-243217-001	=	=		
14		00-298963-012	=	=		
15		01-243234-001	=	=		
16	L/R	01-291762-001	=	=		ohne Trocknung / without dryer / sans séchage
	R/L	01-291762-002	=	=		ohne Trocknung / without dryer / sans séchage
	L/R	01-291762-003	=	=		mit Trocknung / with dryer / avec séchage
	R/L	01-291762-004	=	=		mit Trocknung / with dryer / avec séchage
17		00-609067-000	=	=		
18		00-884128-009	=	=		L=360 mm
19		00-884105-001	=	=		
20		01-243214-001	=	=		
21		00-603618-000	=	=		
22		01-243233-001	=	=		
23		00-735094-001	=	=		
24		01-291763-001	=	=		
25		01-243229-001	=	=		
26		00-897727-002	=	=		
27		00-897727-001	=	=		
28		01-243220-001	=	=		
29		00-325529-001	=	=		
30		00-896477-001	=	=		
31		01-243230-001	=	=		
32		00-734997-001	=	=		
33		00-895610-001	=	=		
34		00-325008-001	=	=		
35		00-325007-001	=	=		
36	L/R	01-242184-001	=	=		
	R/L	01-242184-002	=	=		
37		01-291759-001	=	=		

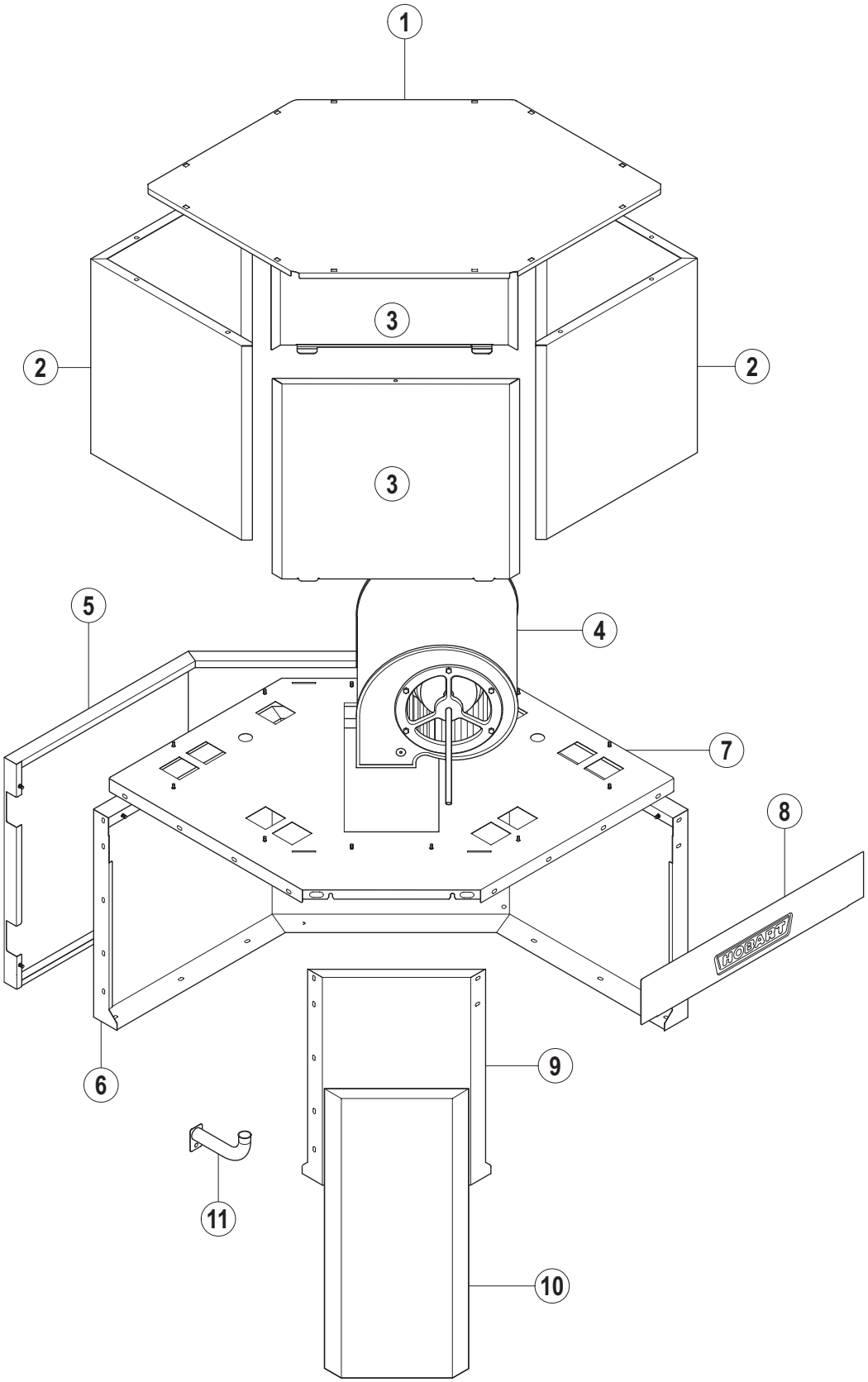
1
2
2
3
3
4
5
6
7
8
HOBART
9
10
11

A Laufrichtung / Working direction / Sens de marche

B Maschinen-Grundtyp / Basic machine / Machine de base

X Länge / Length / Longueur

Pos.	A	B			X [mm]	Bemerkung / Remarks / Remarques
		CS	CN	CP		
01		01-291734-001	=	=		
02		01-291732-001	=	=		
03		01-291735-001	=	=		
04		00-897700-…	=	=		siehe Schaltplan / see wiring diagram / voir schéma de câblage
05		01-291737-001	=	=		
06	L/R	01-291726-001	=	=		
	R/L	01-291726-002	=	=		
07		01-291728-001	=	=		
08		01-291497-002	=	=		
09	L/R	01-291731-001	=	=		CDC91
	R/L	01-291731-002	=	=		CDC91
	L/R	01-291765-001	=	=		CDC181-C
	R/L	01-291765-002	=	=		CDC181-C
10		01-291756-001	=	=		CDC91
		01-291841-001	=	=		CDC181-C
11		01-291754-001	=	=		

CS / CN / CP

Dampfverrohrung

Steam piping

Tuyauterie vapeur

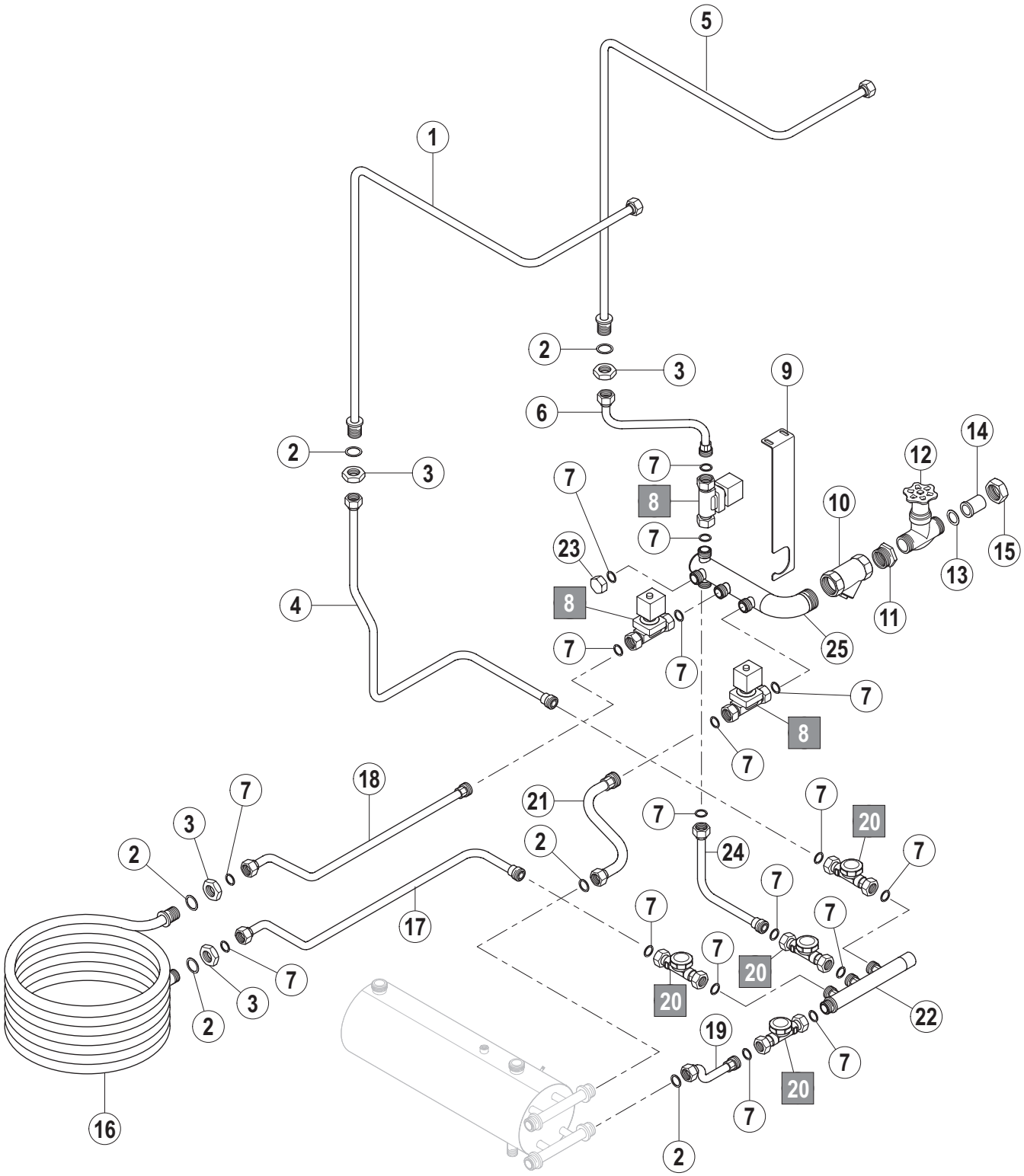
5
1
2
3
9
6
14
12
7
8
10
23
15
13
4
11
25
18
21
24
20
17
22
19
16

A Laufrichtung / Working direction / Sens de marche

B Maschinen-Grundtyp / Basic machine / Machine de base

X Länge / Length / Longueur

Pos.	A	B			X [mm]	Bemerkung / Remarks / Remarques
		CS	CN	CP		
01	L/R	---	01-291891-001	---		mit CDS-Trockung / with CDS dryer / avec séchage CDS
	R/L	---	01-291891-003	---		mit CDS-Trockung / with CDS dryer / avec séchage CDS
	L/R	---	01-291897-001	---		mit CDC-Trockung / with CDC dryer / avec séchage CDC
	R/L	---	01-291897-003	---		mit CDC-Trockung / with CDC dryer / avec séchage CDC
02		---	00-304084-010	---		
03		---	00-609698-000	---		
04	L/R	---	01-291919-001	---		mit CDS-Trockung / with CDS dryer / avec séchage CDS
	R/L	---	01-291932-001	---		mit CDS-Trockung / with CDS dryer / avec séchage CDS
	L/R	---	01-291919-002	---		mit CDC-Trockung / with CDC dryer / avec séchage CDC
	R/L	---	01-291932-002	---		mit CDC-Trockung / with CDC dryer / avec séchage CDC
05	L/R	---	01-291891-002	---		mit CDS-Trockung / with CDS dryer / avec séchage CDS
	R/L	---	01-291891-004	---		mit CDS-Trockung / with CDS dryer / avec séchage CDS
	L/R	---	01-291897-002	---		mit CDC-Trockung / with CDC dryer / avec séchage CDC
	R/L	---	01-291897-004	---		mit CDC-Trockung / with CDC dryer / avec séchage CDC
06		---	01-2919907-001	---		mit CDS-Trockung / with CDS dryer / avec séchage CDS
		---	01-2919907-002	---		mit CDC-Trockung / with CDC dryer / avec séchage CDC
07		---	00-302574-014	---		
08		---	01-245593-001	---		Dampf / steam / vapeur **1 - 3,5 bar**
		---	01-245593-002	---		Dampf / steam / vapeur **<= 1 bar**
09		---	01-291929-001	---		
10		---	00-774429-001	---		
11		---	00-609276-000	---		
12		---	00-165829-102	---		
13		---	00-300084-007	---		
14		---	00-846944-002	---		
15		---	00-609460-000	---		
16		---	01-245647-002	---		
17	L/R	---	01-291917-001	---		
	R/L	---	01-291917-002	---		
18		---	01-291905-001	---		
19		---	01-291915-001	---		
20		---	01-245603-002	---		
21		---	01-291899-001	---		
22		---	01-291912-001	---		
23		---	01-245605-001	---		
24		---	01-291909-001	---		
25		---	01-291902-001	---		

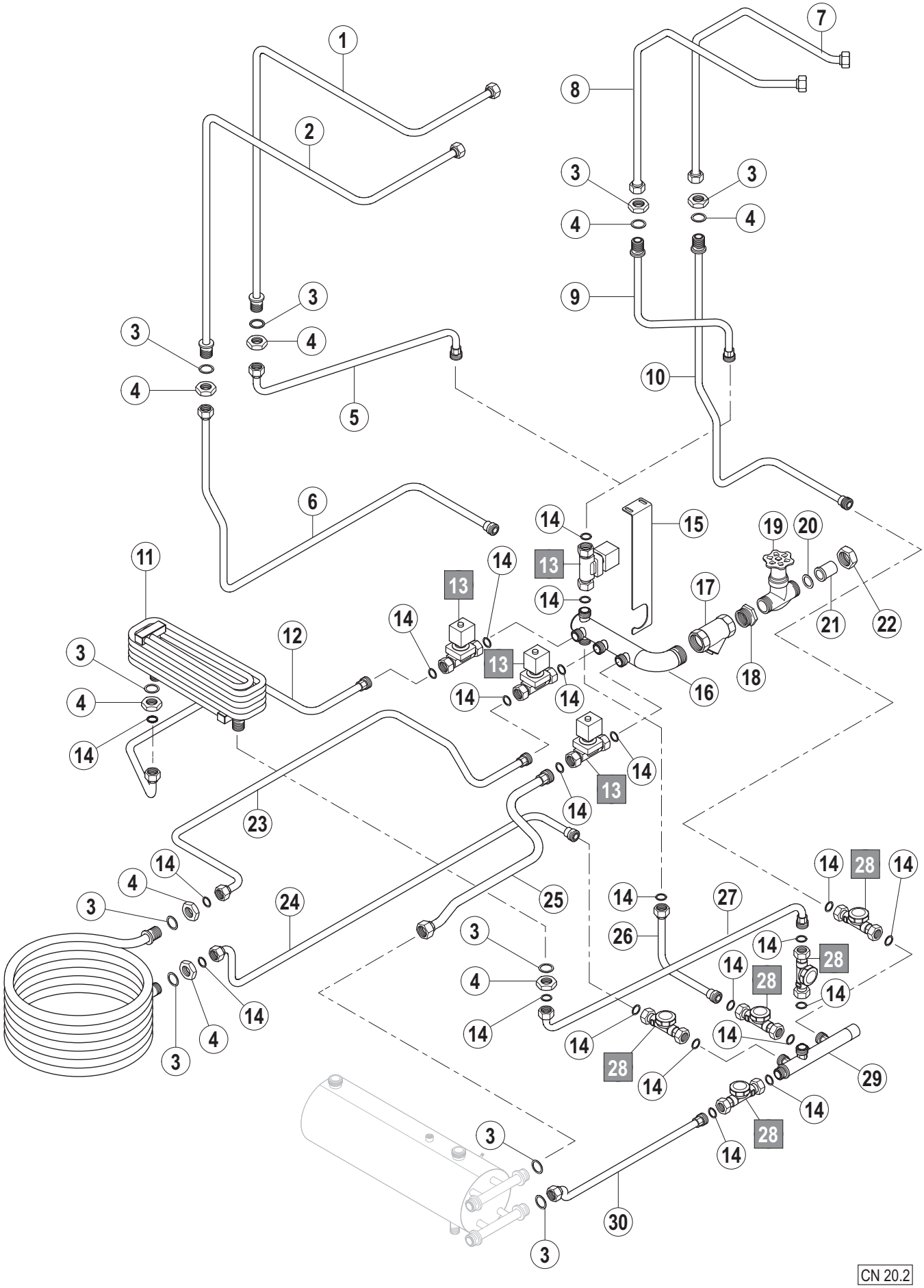
1
2
3
4
5
6
7
8
9
10
11
12
13
14
15
16
17
18
19
20
21
22
23
24
25
26
27
28
29
30
CN 20.2

A Laufrichtung / Working direction / Sens de marche

B Maschinen-Grundtyp / Basic machine / Machine de base

X Länge / Length / Longueur

Pos.	A	B			X [mm]	Bemerkung / Remarks / Remarques
		CS	CN	CP		
01	L/R	---	01-291891-001	=		mit DS-Trockung / with DS dryer / avec séchage DS
	R/L	---	01-291891-003	=		mit DS-Trockung / with DS dryer / avec séchage DS
02	L/R	---	01-291891-002	=		mit DS-Trockung / with DS dryer / avec séchage DS
	R/L	---	01-291891-004	=		mit DS-Trockung / with DS dryer / avec séchage DS
03		---	00-304084-010	=		
04		---	00-609698-000	=		
05		---	01-291907-003	=		
06	L/R	---	01-291919-004	=		
	R/L	---	01-291932-004	=		
07	L/R	---	01-291897-001	=		mit CDC-Trockung / with CDC dryer / avec séchage CDC
	R/L	---	01-291897-003	=		mit CDC-Trockung / with CDC dryer / avec séchage CDC
08	L/R	---	01-291897-002	=		mit CDC-Trockung / with CDC dryer / avec séchage CDC
	R/L	---	01-291897-004	=		mit CDC-Trockung / with CDC dryer / avec séchage CDC
09		---	01-291907-004	=		
10	L/R	---	01-291919-003	=		
	R/L	---	01-291932-003	=		
11		---	---	01-291055-001		
12	L/R	---	---	01-291934-001		
	R/L	---	---	01-291934-002		
13		---	01-245593-001	=		Dampf / steam / vapeur **1 - 3,5 bar**
		---	01-245593-002	=		Dampf / steam / vapeur **<= 1 bar**
14		---	00-302574-014	=		
15		---	01-291929-001	=		
16		---	01-291902-001	=		
17		---	00-774429-001	=		
18		---	00-609276-000	=		
19		---	00-165829-102	=		
20		---	00-300084-007	=		
21		---	00-846944-002	=		
22		---	00-609460-000	=		
23	L/R	---	01-291936-001	=		
	R/L	---	01-291936-002	=		
24	L/R	---	01-291917-003	=		
	R/L	---	01-291917-004	=		
25		---	01-291899-002	=		
26		---	01-291909-001	=		
27		---	---	01-291922-001		
28		---	01-245603-002	=		
29		---	01-291912-001	=		**A-Maschine / A- machine**
		---	01-291912-004	=		**AA-Maschine / AA- machine**
	L/R	---	---	01-291912-002		
	R/L	---	---	01-291912-003		
30		---	01-291915-002	=		

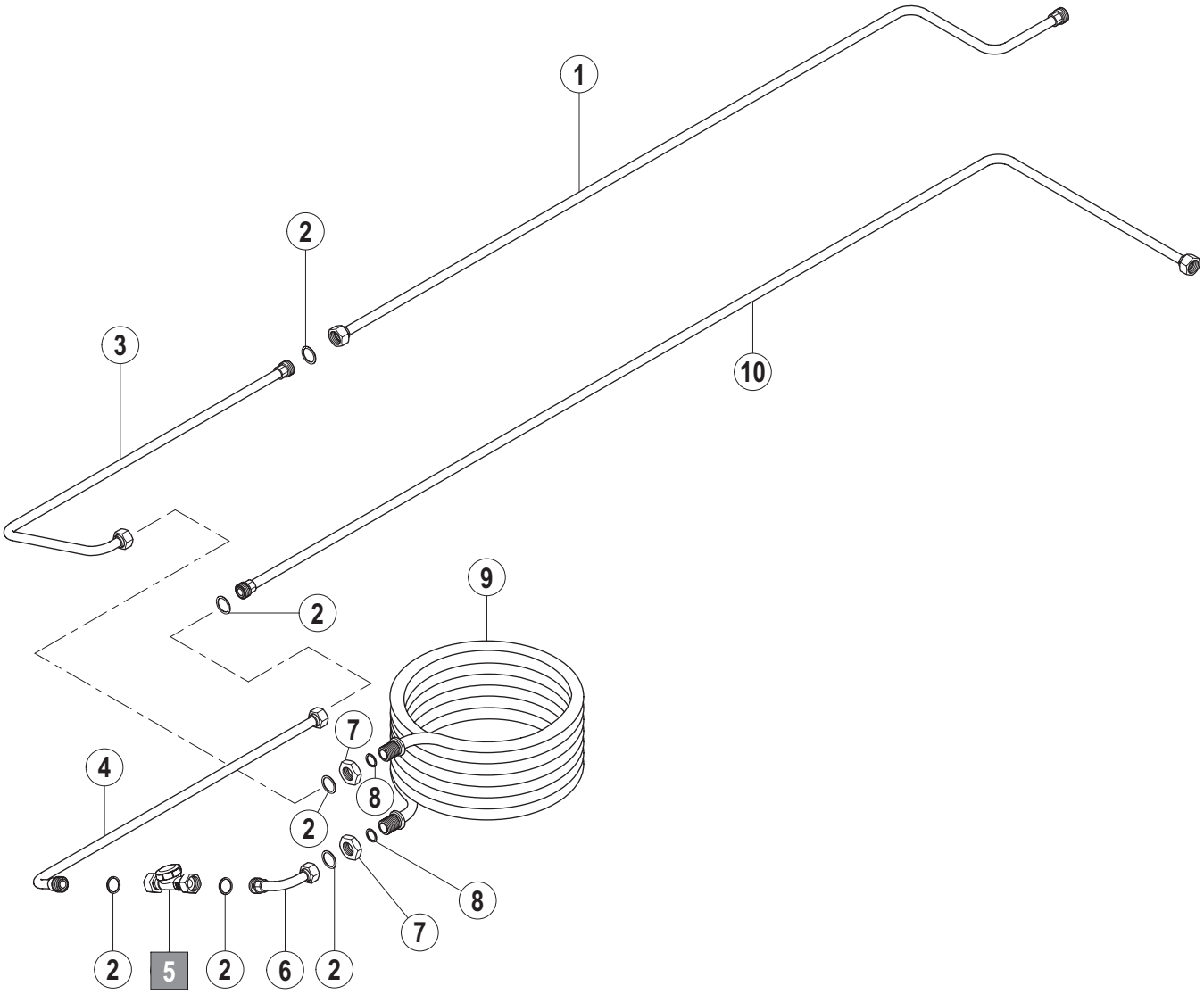
1
2
3
10
9
2
7
4
8
2
8
7
2
5
2
6
2

A Laufrichtung / Working direction / Sens de marche

B Maschinen-Grundtyp / Basic machine / Machine de base

X Länge / Length / Longueur

Pos.	A	B			X [mm]	Bemerkung / Remarks / Remarques
		CS	CN	CP		
01		---	01-291926-001	---		
02		---	00-302574-014	---		
03		---	01-291926-002	---		
04		---	01-291924-002	---		
05		---	01-245603-002	---		
06		---	01-291924-003	---		
07		---	00-609698-000	---		
08		---	00-300084-010	---		
09		---	01-245647-002	---		
10		---	01-291924-001	---		

CS / CN / CP

CAF Eckeinschub

CAF corner guiding

CAF guidage sur angle

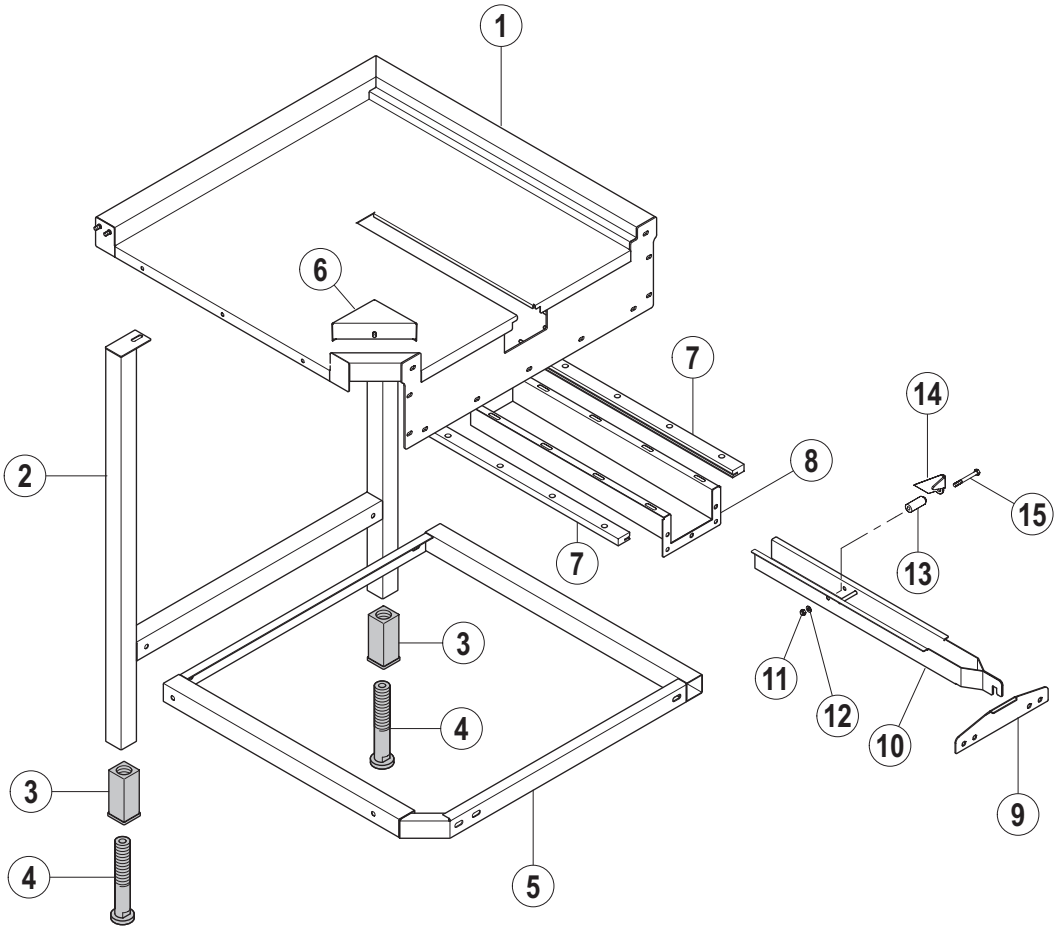
1
6
7
14
2
8
15
7
13
3
11
4
12
10
3
9
4
5

A Laufrichtung / Working direction / Sens de marche

B Maschinen-Grundtyp / Basic machine / Machine de base

X Länge / Length / Longueur

Pos.	A	B			X [mm]	Bemerkung / Remarks / Remarques
		CS	CN	CP		
01	L/R	01-296079-001	=	=		
	R/L	01-296082-001	=	=		
02		00-896477-001	=	=		
03		00-325008-001	=	=		
04		00-325007-001	=	=		
05	L/R	00-896478-001	=	=		
	R/L	00-896478-002	=	=		
06		00-896362-001	=	=		
07		00-734945-001	=	=		
08		00-734947-001	=	=		
09		01-296076-001	=	=		
10		01-296078-001	=	=		
11		00-602502-000	=	=		
12		00-602286-000	=	=		
13		01-249194-001	=	=		
14	L/R	01-249191-001	=	=		
	R/L	01-249191-002	=	=		
15		00-603355-000	=	=		

CS / CN / CP

Tischendschalter

Table end switch

Interrupteur fin-de-course de table

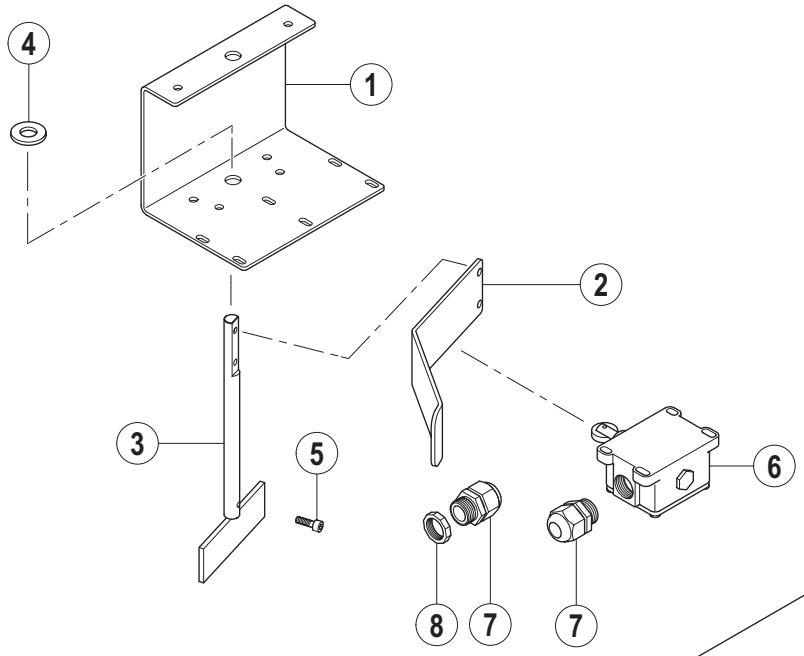

mechanisch
mechanical
mécanique

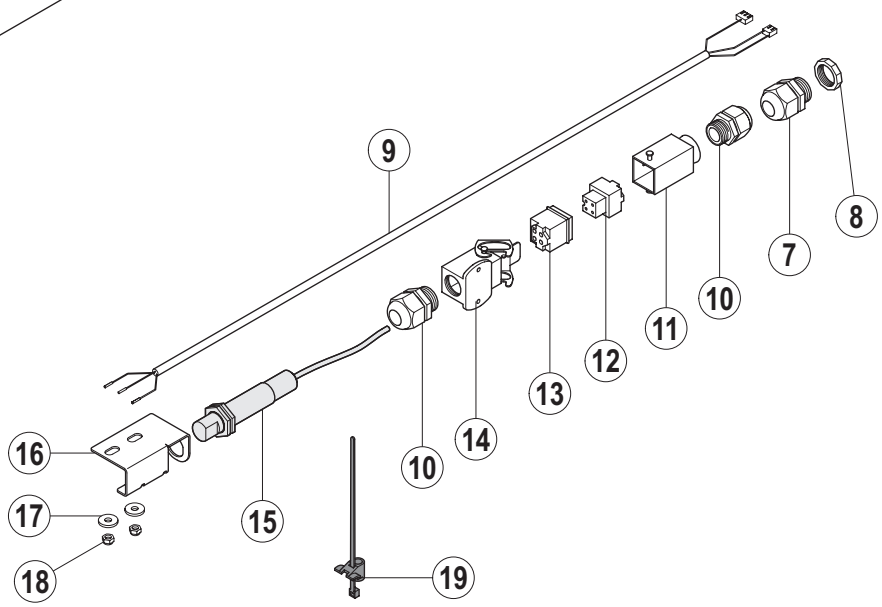

optisch
optical
optique

A Laufrichtung / Working direction / Sens de marche

B Maschinen-Grundtyp / Basic machine / Machine de base

X Länge / Length / Longueur

Pos.	A	B			X [mm]	Bemerkung / Remarks / Remarques
		CS	CN	CP		
01		00-896493-001	=	=		
02		00-735084-001	=	=		
03		00-735085-003	=	=		
04		00-228694-014	=	=		
05		00-609472-000	=	=		
06		00-785410-001	=	=		
07		00-695661-003	=	=		M20
08		00-695664-003	=	=		M20
09		00-691928-002	=	=		
10		00-324304-003	=	=		PG11
11		00-780090-003	=	=		
12		00-785090-004	=	=		
13		00-780090-005	=	=		
14		00-780090-001	=	=		
15		00-691927-001	=	=		
16		00-886535-001	=	=		
17		00-602318-000	=	=		
18		00-602501-000	=	=		
19		00-691923-001	=	=		

CS / CN / CP

Vorhänge

Curtains

Rideaux

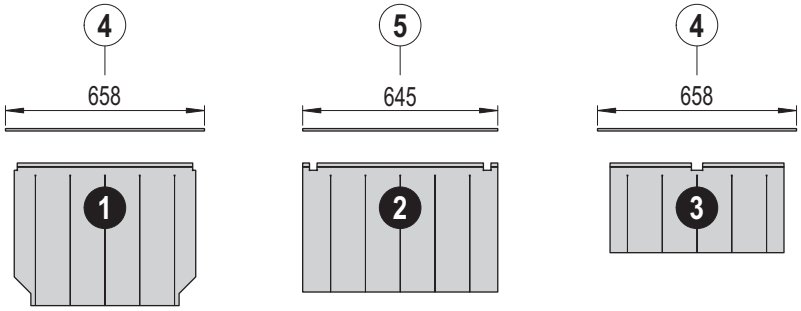

Module / Modules

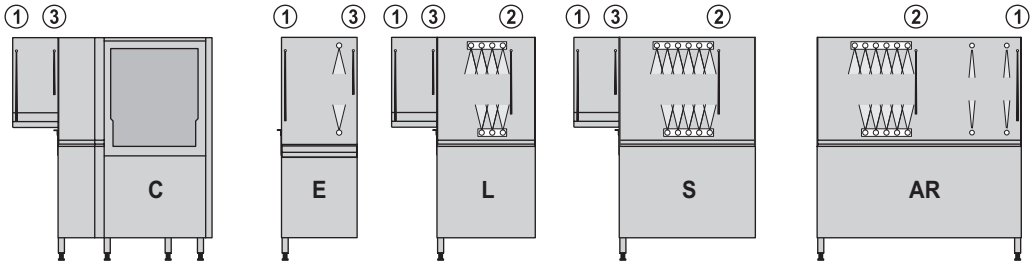

Beispiele / Examples / Exemples

CS

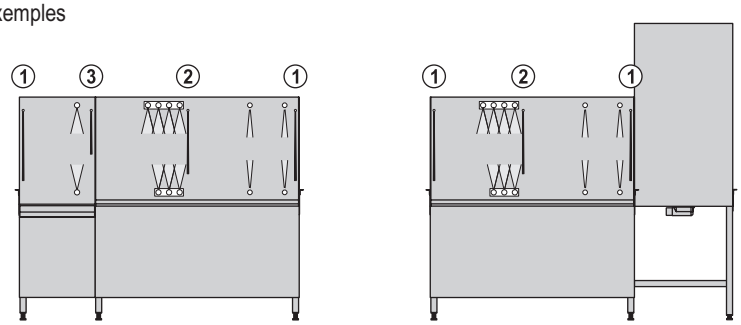

Beispiele / Examples / Exemples

CN

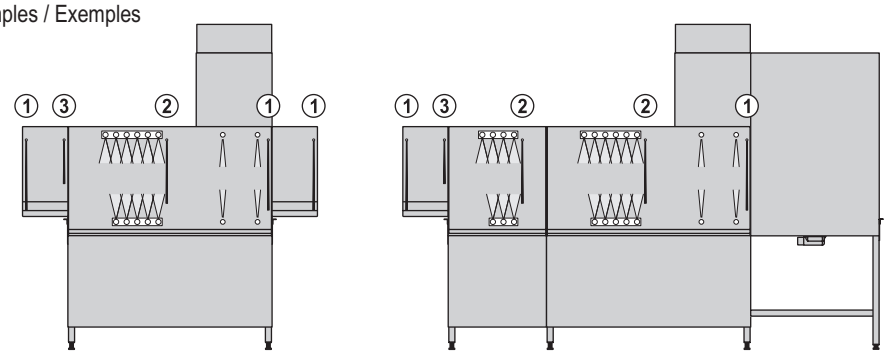

Beispiel / Example / Exemple

CP

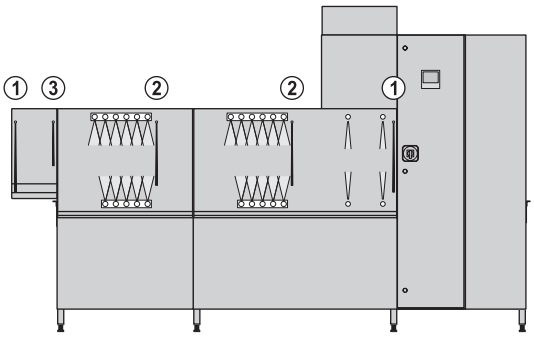

A Laufrichtung / Working direction / Sens de marche

B Maschinen-Grundtyp / Basic machine / Machine de base

X Länge / Length / Longueur

Pos.	A	B			X [mm]	Bemerkung / Remarks / Remarques
		CS	CN	CP		
01		01-291315-001	=	=		
02		01-291315-003	=	=		
03		01-291315-002	=	=		
04		01-245396-007	=	=		
05		01-245396-006	=	=		

HOBART behält sich das Recht vor, an allen Produkten technische Änderungen und Verbesserungen ohne Ankündigung vorzunehmen.

As continued product improvement is a policy of HOBART, specifications are subject to change without notice.

Ce catalogue n’est pas contractuel. HOBART se réserve le droit, et sans préavis, d’apporter toutes modifications ou améliorations à ses matériels.

Printed in Germany

AG-21639-B-04-09-PC